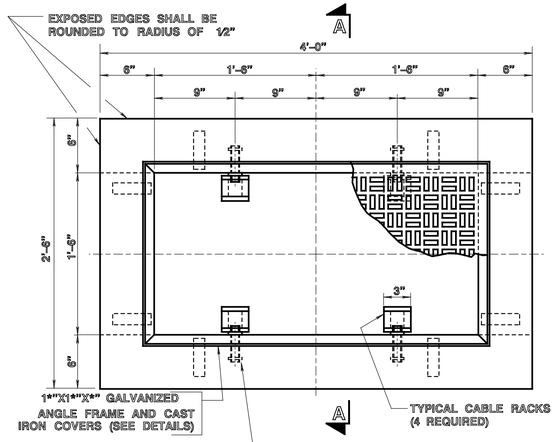

PLAN

18" X 36" JUNCTION BOX – CLASS "JB"
CONCRETE CLASS "B"
USING APPROVED *" AGGREGATE
0.8 CU. YD.

NOTES

MINIMUM WEIGHT OF FRAME * 16 LBS.
MINIMUM WEIGHT OF C.I. COVER * 150 LBS.
FRAME AND ANCHORS OF STRUCTURAL STEEL.
(E) – DENOTES 1" X *" X 6" STL. ANCHORS (8 REQUIRED)

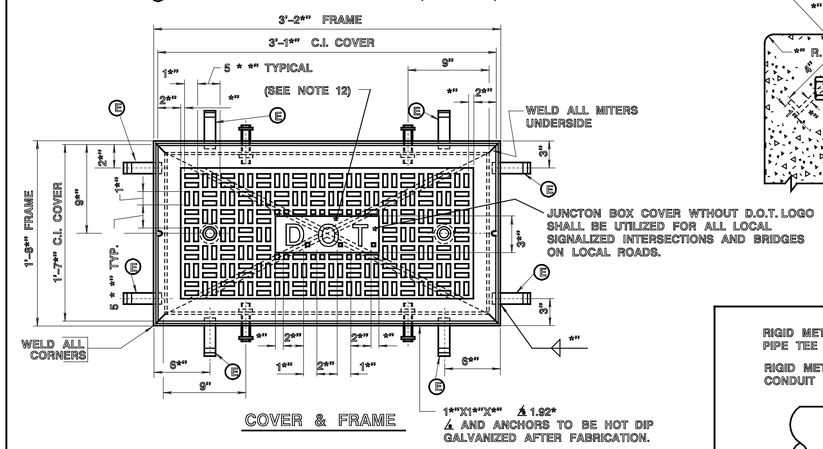

COVER & FRAME

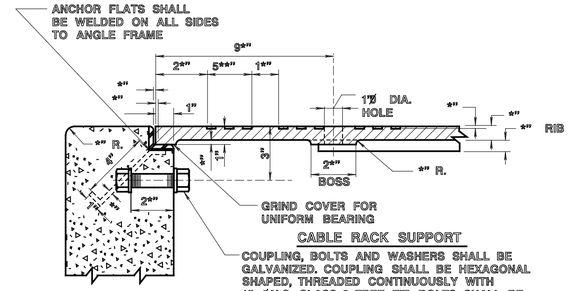

CABLE RACK SUPPORT

SECTION THRU JUNCTION BOX

ALTERNATE CABLE RACK SUPPORT

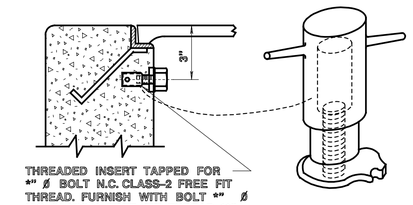

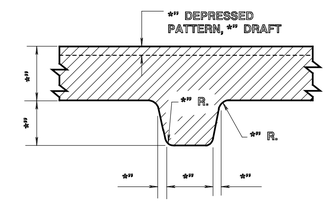

SECTION OF RIB

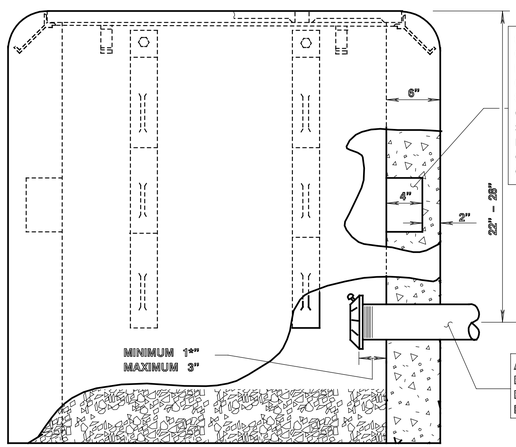

6"X18"X4" RECESS IN END WALLS OF JUNCTION BOX FOR INSERTING REQUIRED CONDUITS. NUMBER OF CONDUITS ENTERING JUNCTION BOX SHALL BE DETERMINED FROM THE GENERAL PLANS. WALL OF RECESS SHALL BE BROKEN, CONDUIT(S) INSERTED AND REMAINING AREA OF WALL AND RECESS SHALL BE COMPLETELY SEALED WITH GROUT.

ADDITIONAL OPENINGS SHALL BE PROVIDED AT APPROVED ELEVATIONS FOR UNDER ROADWAY CONDUITS ENTERING JUNCTION BOX – TYPICAL.

ELEVATION

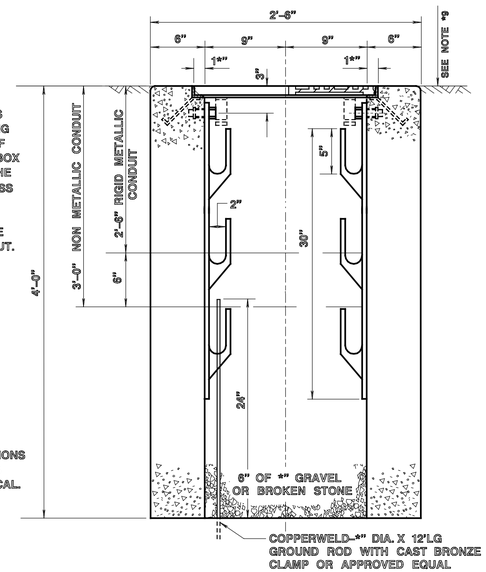

SECTION A–A

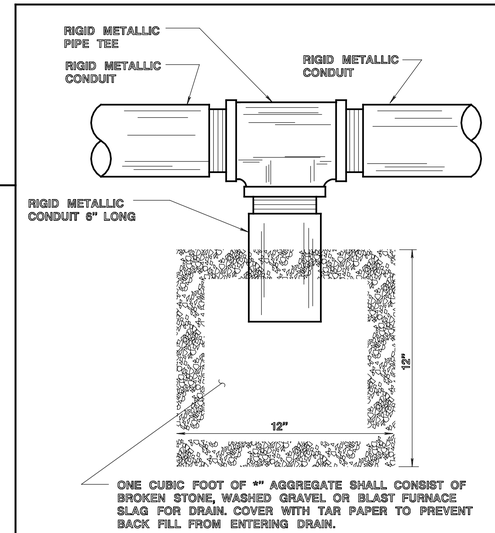

TYPICAL TEE DRAIN

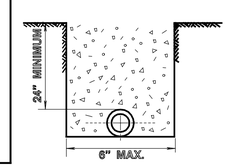

CONDUITS INSTALLATION–
OPEN CUT METHOD

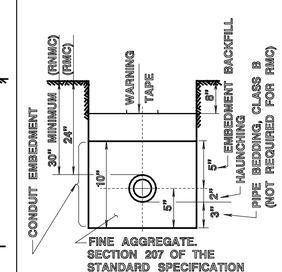

NON METALLIC CONDUIT & CUG
INSTALLATION

TYPICAL CONDUIT INSTALLATION

NOTES:

1.) JUNCTION BOX FOUNDATION SHALL BE SET PARALLEL TO THE CURB AND TOP OF JUNCTION BOX SHALL BE SET AT GRADE IN SIDEWALK, PAVED AREA, IN GRASS OR DIRT AREAS.

2.) CABLE RACKS FURNISHED AND INSTALLED AS INDICATED.

3.) BONDING AND GROUNDING INSULATED BUSHINGS SHALL BE INSTALLED ON METALLIC CONDUITS TERMINATING IN JUNCTION BOXES AND/OR FOUNDATIONS AND SHALL HAVE A FITTING TO PREVENT ENTRY OF FOREIGN MATTER PRIOR TO INSTALLATION OF WIRING.

4.) A NYLON CORD, 125 POUND MINIMUM TEST STRENGTH, SHALL BE FURNISHED AND INSTALLED IN ALL CONDUITS. SEE SPECIFICATIONS.

5.) CONDUITS SHALL ENTER JUNCTION BOX PERPENDICULAR TO WALLS OR AS APPROVED BY THE ENGINEER. A 2" SEPARATION SHALL BE MAINTAINED BETWEEN ADJACENT WALLS, CONDUITS, AND CABLE RACK LOCATIONS.

6.) TERMINAL ENDS OF ALL METALLIC CONDUIT SHALL BE THREADED.

7.) ALL NON-METALLIC CONDUITS SHALL TERMINATE WITH BELL END CONSTRUCTION IN JUNCTION BOX.

8.) ALL UNUSED CONDUITS SHALL BE PLUGGED OR CAPPED.

9.) ENGINEER MAY REQUIRE TOP OF JUNCTION BOX TO BE INCLINED IN ORDER TO CONFORM WITH FIELD CONDITIONS. JUNCTION BOX SHALL BE SET TO GRADE IN SIDEWALK AREA AND IN ALL OTHER AREAS.

10.) WARNING TAPE SHALL BE A RED 4 MIL FLEXIBLE POLYETHYLENE FILM WHICH IS RESISTANT TO ACIDS, BASES, HYDROCARBONS AND WATER.

11.) IN INCLINE AREA, NO PART OF THE JUNCTION BOX SHALL EXTEND MORE THAN 4" ABOVE THE FINISH GRADE.

12.) JUNCTION BOX COVER WITHOUT D.O.T. LOGO SHALL BE UTILIZED FOR ALL LOCAL SIGNALIZED INTERSECTIONS AND BRIDGES ON LOCAL ROADS.

RIGID METALLIC CONDUIT INSTALLED IN SUBBASE OF CONCRETE ROAD

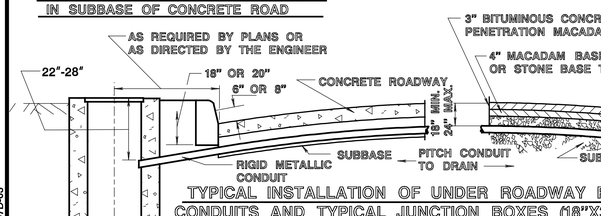

RIGID METALLIC CONDUIT INSTALLED IN SUBBASE OF BITUMINOUS SURFACE ROAD

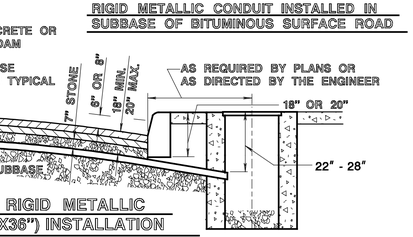

TYPICAL INSTALLATION OF UNDER ROADWAY RIGID METALLIC CONDUITS AND TYPICAL JUNCTION BOXES (18"X36") INSTALLATION

SUBJECT TO APPROVAL OF THE ENGINEER

WARNING TAPE

CAUTION CAUTION CAUTION
ELECTRIC LINE BURIED BELOW

6" TYP.

BLACK LETTERS ON RED BACKGROUND

NEW JERSEY DEPARTMENT OF TRANSPORTATION

ELECTRICAL DETAILS

N.T.S.

18" X 36" JUNCTION BOX CAST IN PLACE TYPE
TYPICAL INSTALLATION OF JUNCTION BOX
& UNDER ROADWAY CONDUIT

L–0607

REFERENCE

BDC07D-03