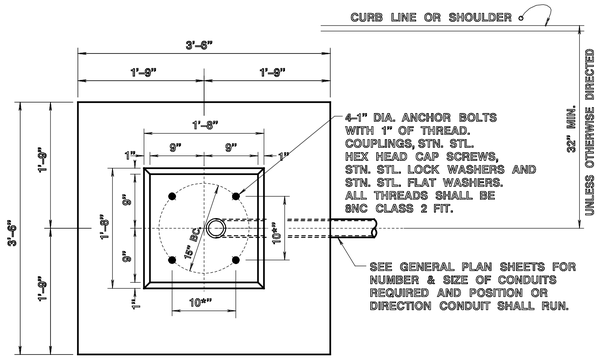

PLAN

CONCRETE CLASS "B"
1.5 CU. YDS.
FOUNDATION SHALL BE POURED
MONOLITHIC

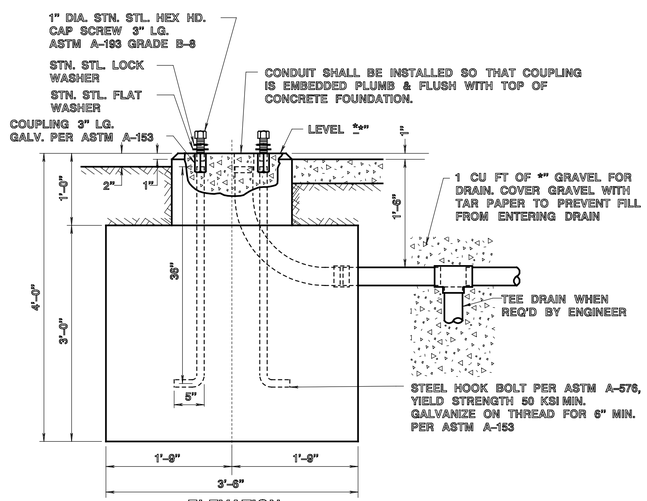

ELEVATION

FOUNDATION
TYPE "SFT"

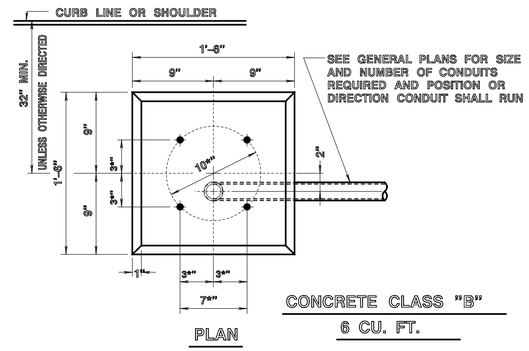

PLAN

CONCRETE CLASS "B"
6 CU. FT.

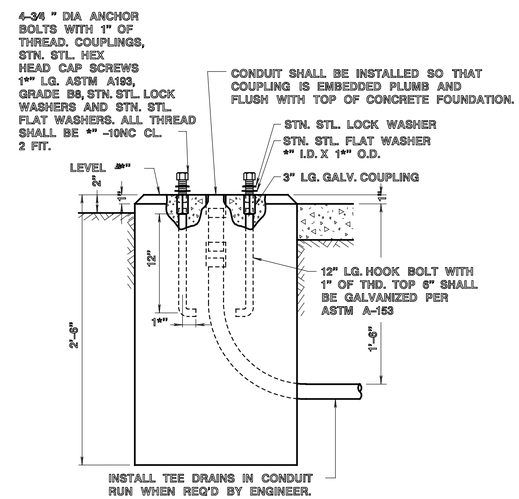

ELEVATION

FOUNDATION
TYPE "SPF"

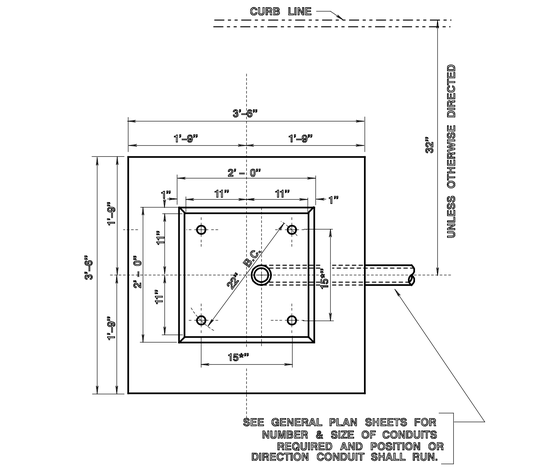

PLAN

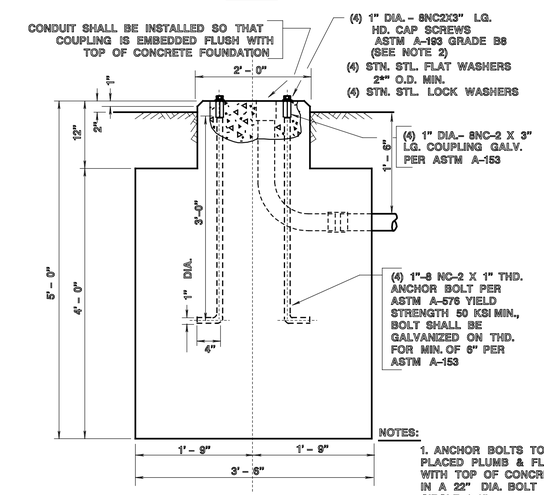

ELEVATION

FOUNDATION TYPE "SFK"

NOTES:

1. ANCHOR BOLTS TO BE PLACED PLUMB & FLUSH WITH TOP OF CONCRETE IN A 22" DIA. BOLT CIRCLE * *" .
2. CAP SCREW SHALL PROVIDE A MINIMUM OF ONE INCH OF THREAD IN THE COUPLING WITHOUT BUTTING THE ANCHOR BOLT.

CONCRETE CLASS "B"
2 CU. YDS.
FOUNDATION SHALL BE POURED MONOLITHIC

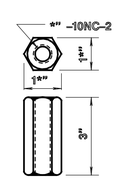

GALVANIZED
COUPLING

GALV. PER ASTM A-153
CONTINUOUS THREADS

NOTES:

1. ALL CONDUIT SHALL BE INSTALLED SO THAT COUPLINGS ARE EMBEDDED PLUMB AND FLUSH WITH TOP OF CONCRETE FOUNDATION.
2. J-BOLT MUST BE INSERTED 1*" *" INTO 3" COUPLING

NEW JERSEY DEPARTMENT OF TRANSPORTATION

ELECTRICAL DETAILS
N.T.S.

TYPICAL DETAILS FOR FOUNDATION SFT, SFK & SPF

T-1707

REFERENCE

BDC07D-03