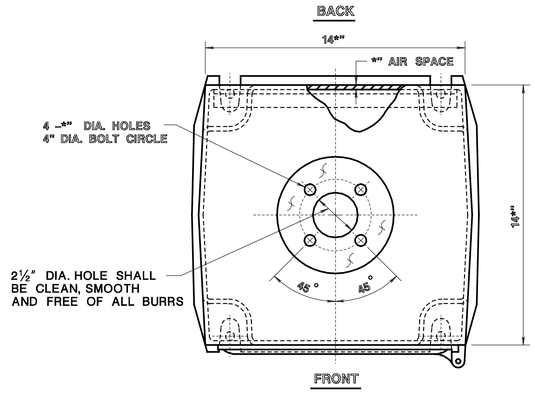

TOP OF METER CABINET

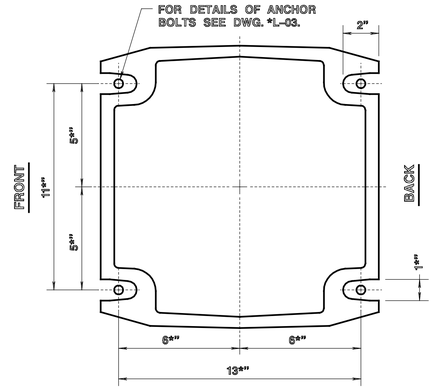

BOTTOM OF METER CABINET

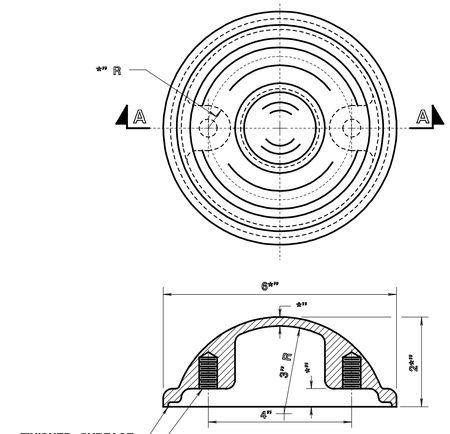

SECTION A–A

METER CABINET CAP DETAIL

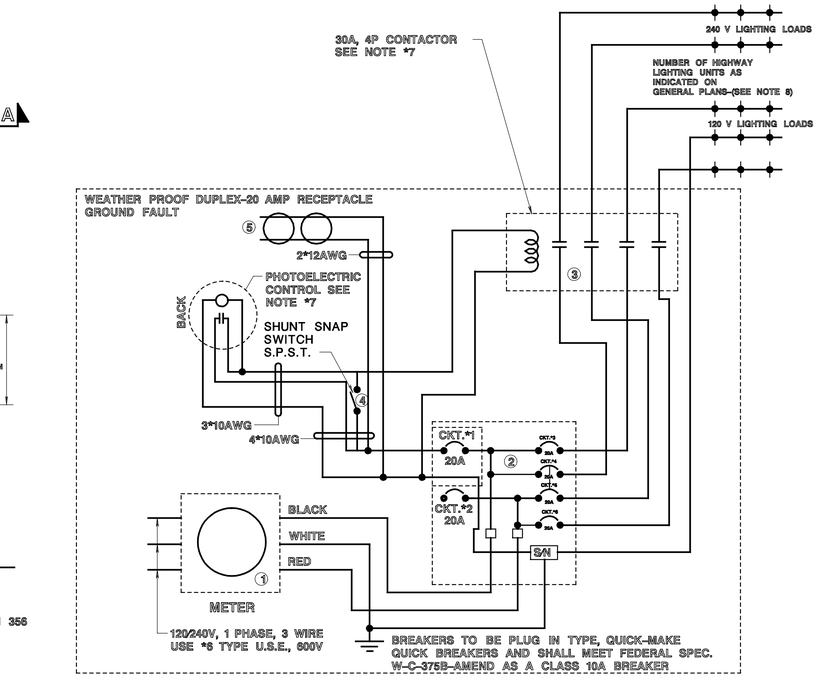

NOTE:
ALL WIRE TO BE *6-AWG-600 VOLT
OR AS OTHERWISE SHOWN.

SCHEMATIC WIRING DIAGRAM: 120/240 VOLT

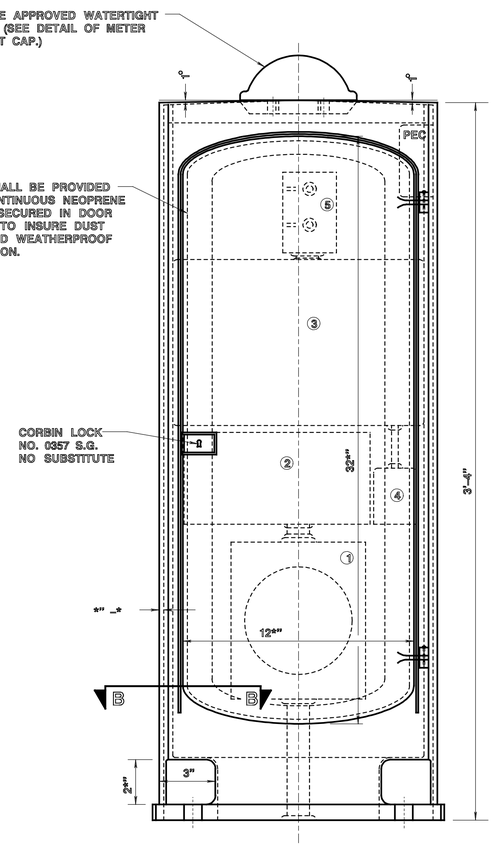

FRONT ELEVATION

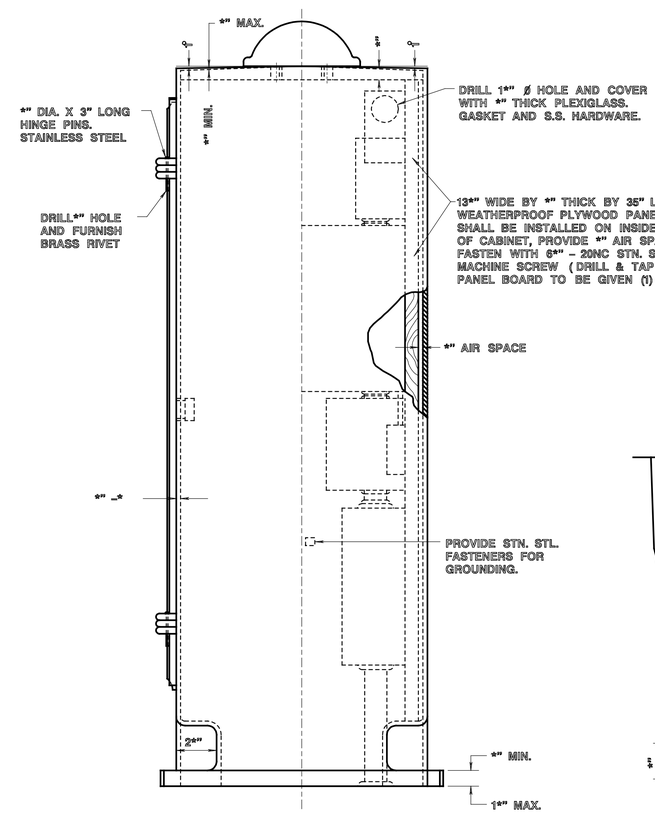

SIDE ELEVATION

ALUMINUM ALLOY, COMMERCIAL DESIGNATION 356
A.S.T.M. DESIGNATION B26-56T, ALLOY SG 70A

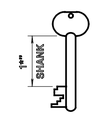

KEY ALIKE CHANGE *1
CUT ON BLANK 04266
FOR SUB TREASURY LOCK *03575
PROVIDE 2 KEYS WITH EACH CABINET

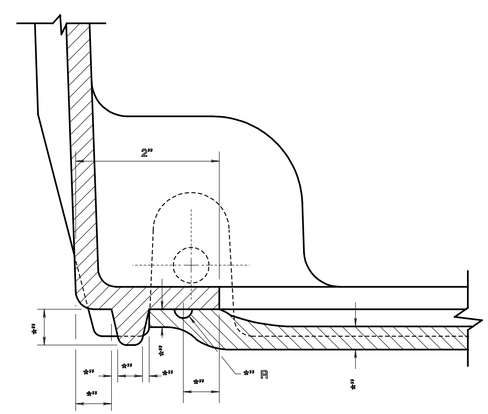

METER CABINET CORNER SECTION

SHOWING DOOR GASKET GROOVE DETAIL.

SECTION B–B

METER CABINET DETAIL

— ALUMINUM ALLOY, COMMERCIAL DESIGNATION 356
A.S.T.M. DESIGNATION B26-56T, ALLOY SG 70A.
— THE CABINET SHALL BE FREE OF BURRS, SHARP EDGES,
DENTS, PINHOLES, AND PARTING LINES AND SHALL HAVE
A UNIFORM *30 GRIT FINISH.
— FOR ALTERNATE FABICATED METER CABINET SEE DWG. T-35.

METER CABINET TYPE "L"

120/240 VOLT 40 AMP MAX. LOAD

NOTE

1. METER SOCKET-INSTALLED BY CONTRACTOR-PROVIDED BY UTILITY COMPANY ON REQUEST. (IN JCP&L CO. AREA METER SOCKET IS TO BE INSTALLED AND FURNISHED BY CONTRACTOR)
2. 4/8 CIRCUIT LOAD CENTER WITH ENCLOSURE COMPLETE WITH 6-20A CIRCUIT BREAKERS.
3. MAGNETIC CONTACTOR, 30 AMP, 120 VOLT COIL NEMA 1 ENCLOSURE.
4. PHOTOELECTIRIC CONTROL UNIT 15 AMP SHUNT SWITCH IN 2" X 4" HANDY BOX OR EQUIVALENT.
5. WEATHERPROOF, 20A DUPLEX RECEPTICAL GROUND FAULT.
6. IF METER IS NOT REQUIRED, INSTALL 1 *" I.D. SEALTITE FLEX CONDUIT AND 1 *" I.D. NIPPLE FROM REDUCER COUPLING TO MAIN BREAKER PANEL.
7. FOR METER CABINET TYPE "L", PHOTOELECTRIC CONTROL AND MAGNETIC CONTACTOR SHALL BE FURNISHED AND INSTALLED.
8. THE TOTAL NUMBER OF CIRCUIT BREAKERS SHALL NOT EXCEED SIX.

NEW JERSEY DEPARTMENT OF TRANSPORTATION

ELECTRICAL DETAILS

N.T.S.

METER CABINET DETAILS TYPE "L"
ELECTRICAL INSTALLATION

L-0907

REFERENCE

BDC07D-03