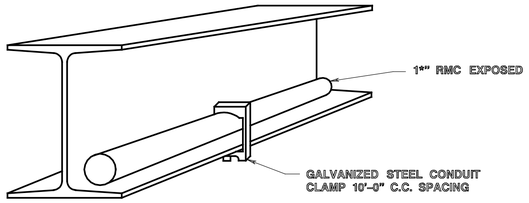

CONDUIT MOUNTING ON BRIDGE MEMBER

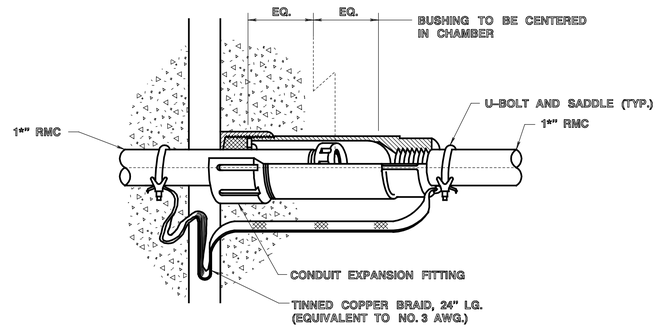

TYPICAL DETAIL
CONDUIT EXPANSION FITTING

NOTES:

1. EXPANSION FITTING TO BE INSTALLED AT ALL EXPANSION JOINTS
2. RIGID METALLIC CONDUIT AND FITTING SHALL BE HOT-DIPPED GALVANIZED.

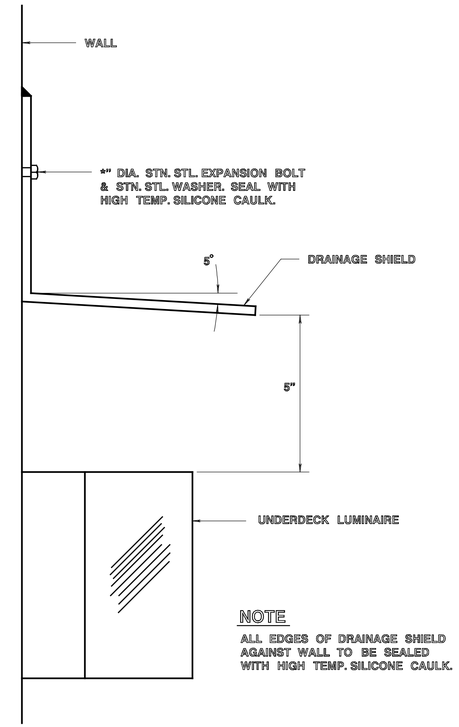

NOTE

ALL EDGES OF DRAINAGE SHIELD AGAINST WALL TO BE SEALED WITH HIGH TEMP. SILICONE CAULK.

TYPICAL DRAINAGE SHIELD INSTALLATION

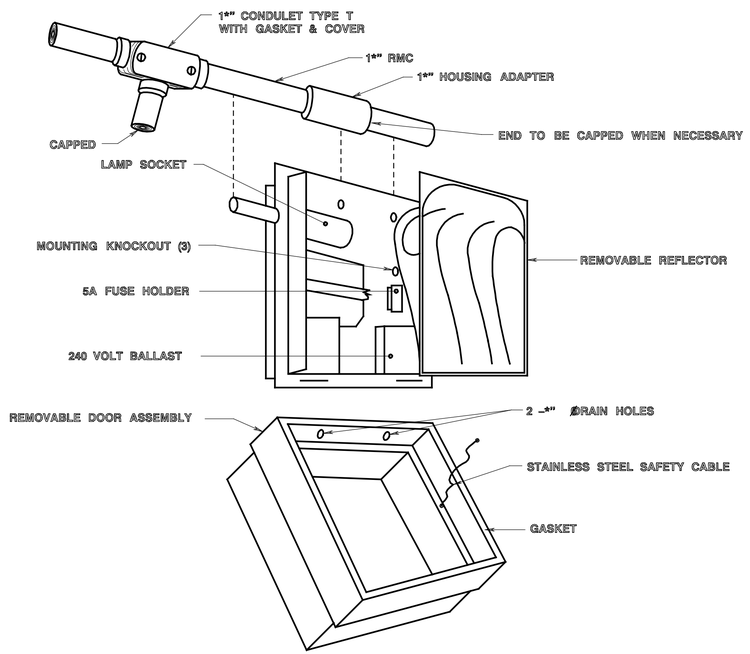

TYPICAL ULA MOUNTING

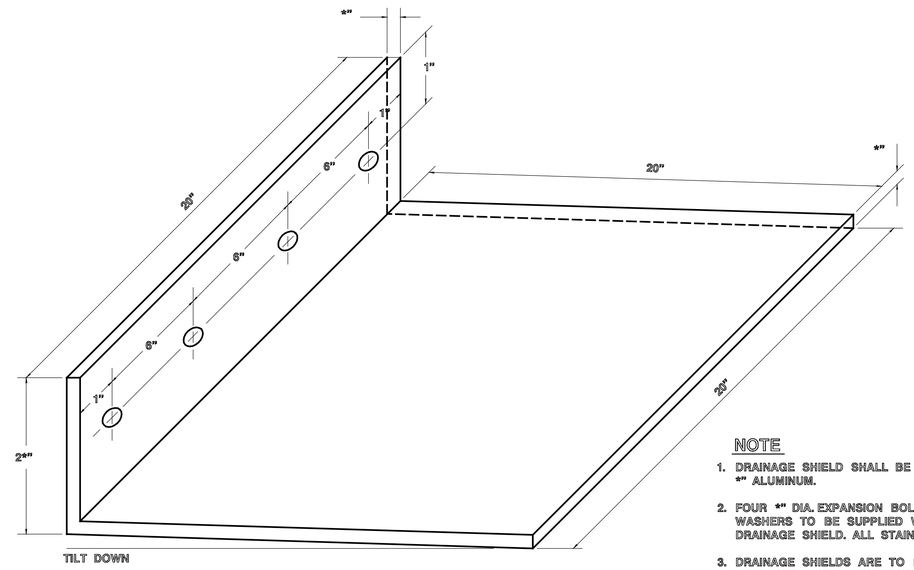

DRAINAGE SHIELD DETAIL

NOTE

1. DRAINAGE SHIELD SHALL BE MADE OF *" ALUMINUM.
2. FOUR *" DIA. EXPANSION BOLTS AND WASHERS TO BE SUPPLIED WITH EACH DRAINAGE SHIELD. ALL STAINLESS STEEL.
3. DRAINAGE SHIELDS ARE TO BE INSTALLED AT A DISTANCE OF 5" FROM TOP OF UNDERDECK LUIMINAIRE.

NEW JERSEY DEPARTMENT OF TRANSPORTATION

ELECTRICAL DETAILS

N.T.S.

DETAIL OF TYPICAL UNDERDECK LIGHTING INSTALLATION

L-1907

REFERENCE

BDC07D-03