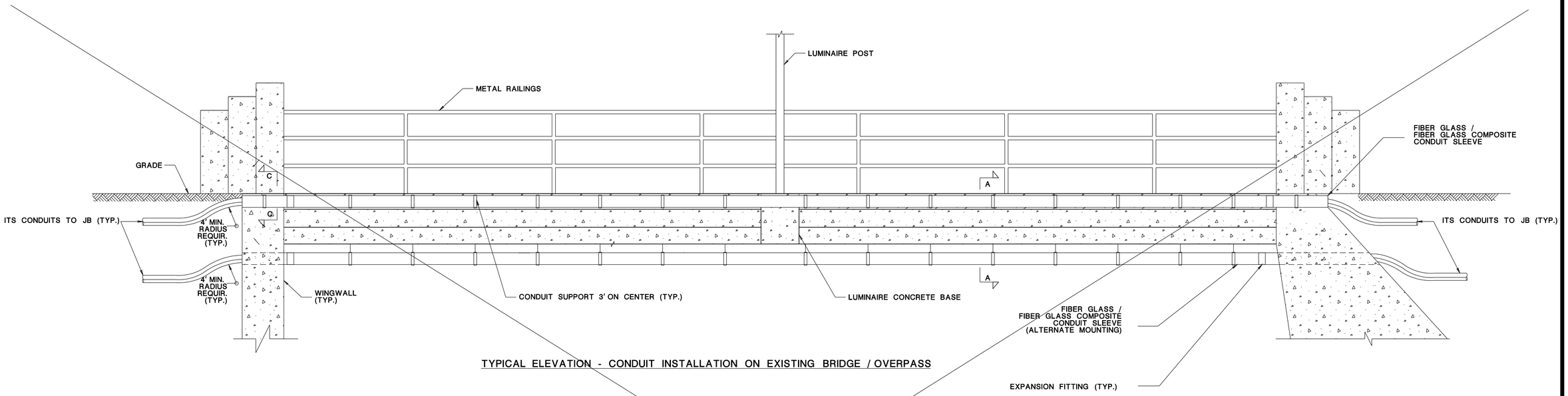

TYPICAL ELEVATION - CONDUIT INSTALLATION ON EXISTING BRIDGE / OVERPASS

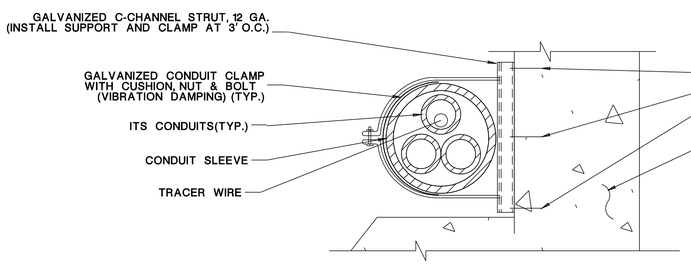

SECTION C-C

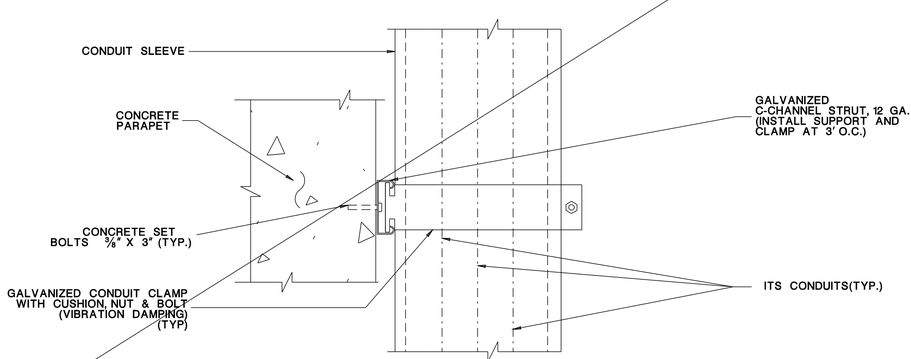

SECTION B-B

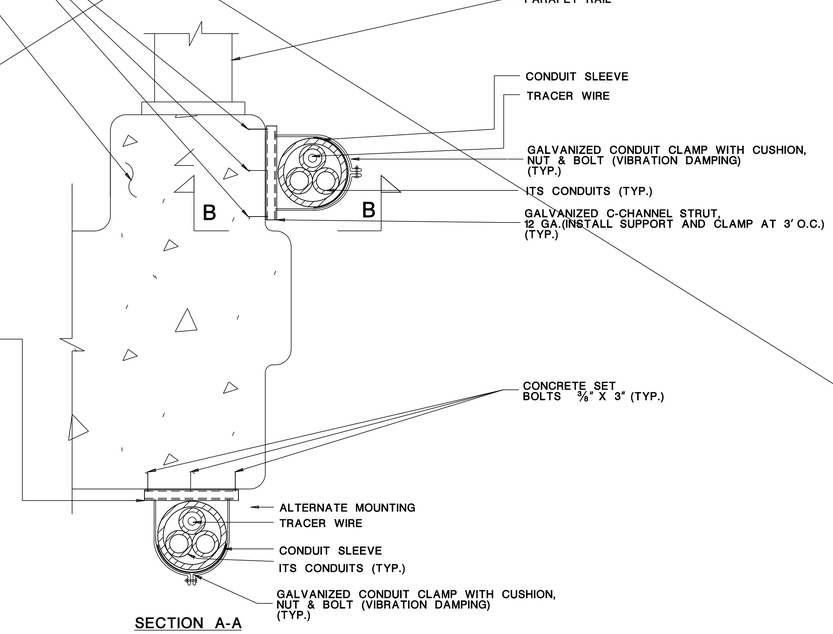

SECTION A-A

NOTES:

1. PROVIDE CONDUIT EXPANSION FITTINGS AT EXISTING STRUCTURE EXPANSION JOINTS.
2. ALTERNATE MOUNTING ON UNDERSIDE OF PARAPET MAY BE PERMITTED WHEN IT IS NECESSARY TO CORE DRILL THROUGH WING WALL IN LIEU OF ABUTMENT WALL. SEAL ALL WING WALL PENETRATIONS WITH EPOXY AROUND CONDUIT.
3. SURVEY EACH STRUCTURE AND SUBMIT SHOP DRAWINGS OF CONDUIT ATTACHMENT DETAILS ALONG WITH MANUFACTURERS RECOMMENDED EXPANSION FITTINGS FOR APPROVAL.
4. IF THERE IS AN EXISTING BRIDGE APPROACH SLAB IN THE SHOULDER AT THE LOCATION OF THE PROPOSED CONDUIT, INSTALL THE CONDUIT BENEATH THE APPROACH SLAB AFTER CORING THROUGH THE BACK WALL. ENSURE THE EXISTING APPROACH SLAB IS NOT DISTURBED.
5. ENSURE THE CONCRETE SET BOLT MATERIAL CONFORMS TO ASTM B-633 AND IS MADE OF ZINC PLATED STEEL. ENSURE THE SET BOLT CHARACTERISTICS CONFORMS TO GSA SPECIFICATION FF S-325, GROUP VII, TYPE 2.
6. WHEN ALTERNATE MOUNTING IS PROPOSED TO BE USED, ENSURE THAT EXISTING UNDER CLEARANCE IS MAINTAINED.

NOT TO SCALE

ITS-704-01

NEW JERSEY DEPARTMENT OF TRANSPORTATION

ITS DETAILS

TYPICAL CONDUIT HANGER ATTACHMENTS

SHEET 1 OF 2

REFERENCE

NJDOT Design Services

BDC-11D-03 MISC. CHANGES
BDC-07D-03 ORIGINAL SHEET

ID=TPXCHOU date=09-AUG-2019 08:34 scale=30.000000:1.000000 pen table=\\njdotpriws\vbsystem\njdotws\projects\NJDOTEng\Iplot\TBLs\Roadway\dot.tbl

file=Z_CADD Dev Team1b_TouhidulITS_CADD_FilesITS-704-01.dgn