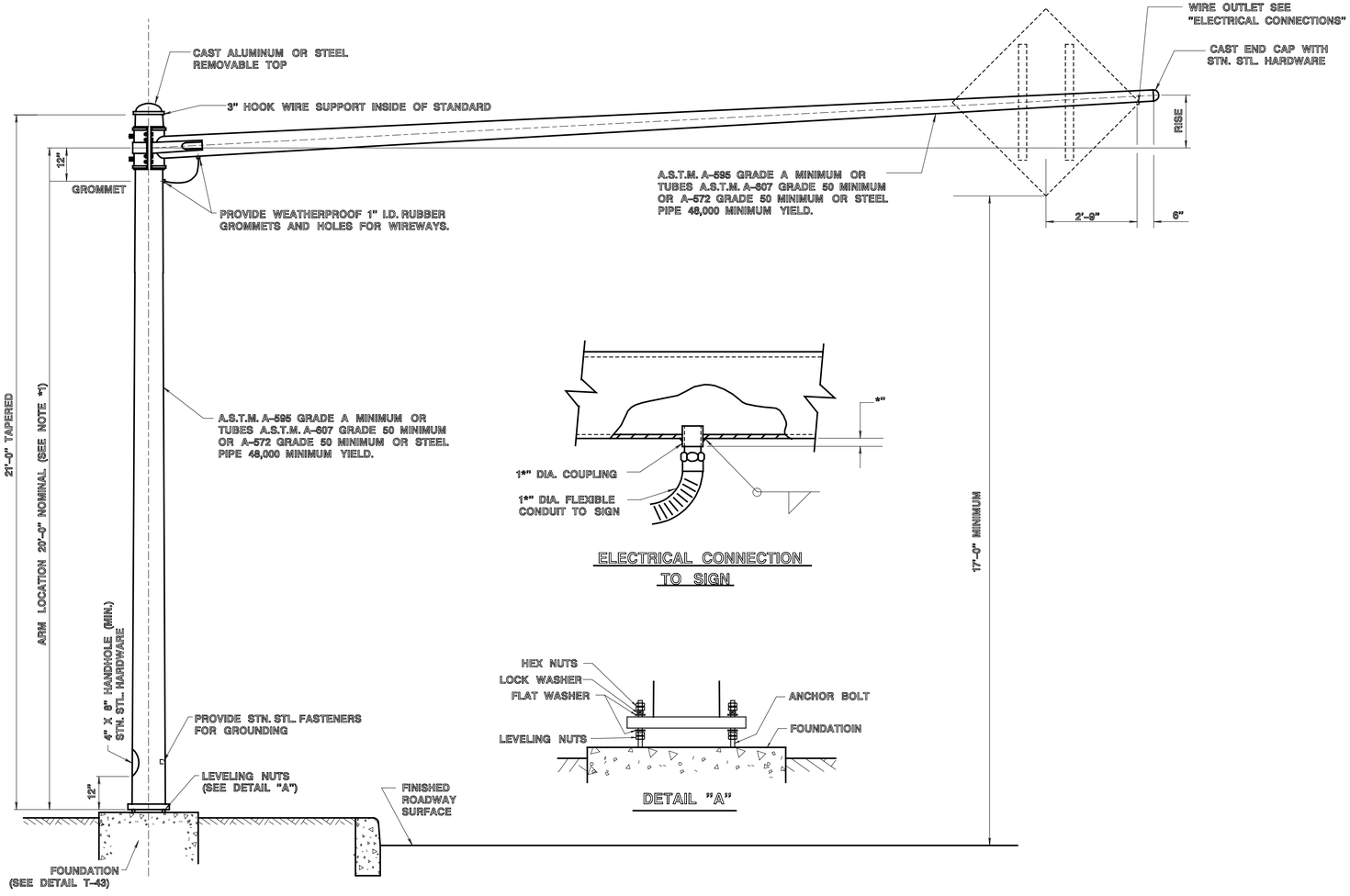

STEEL POLE AND ARM DETAIL FOR ELECTRIC SIGN-ROUND OR MULTISIDED

ELECTRICAL CONNECTION TO SIGN

DETAIL "A"

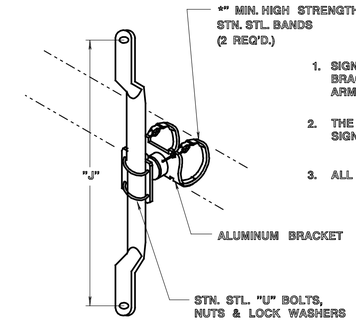

1. SIGN BRACKET SHALL PERMIT ROTATIONAL ADJUSTMENT ABOUT BRACKET AXIS, VERTICAL & ROTATIONAL ADJUSTMENT ABOUT MAST ARM, & ROTATIONAL ADJUSTMENT RIGHT & LEFT IN VERTICAL PLANE.
2. THE SIGN BRACKET SHALL BE DESIGNED TO SUPPORT A 350 LB. SIGN WITH A PROJECTED AREA OF 19 SQ. FT.
3. ALL MOUNTING HARDWARE SHALL BE STAINLESS STEEL.

SIGN SIZE	DIM. "J"
24" X 24"	18"
30" X 30"	24"
36" X 36"	30"
48" X 48"	42"

ALUMINUM SIGN BRACKET DETAIL

NOTES:

1. STANDARD AND MAST ARMS SHALL BE HOT DIPPED GALVANIZED STEEL. FINISH IN ACCORDANCE WITH SPECIFICATIONS A.S.T.M. A-123.
2. DESIGN AND MANUFACTURE ACCORDING TO THE 2001 AASHTO STANDARD SPECIFICATIONS FOR STRUCTURAL SUPPORTS FOR HIGHWAY SIGNS, LUMINAIRES AND TRAFFIC SIGNALS. UTILIZE APPENDIX C OF THE SPECIFICATIONS FOR IDENTIFICATION OF LOADING CRITERIA. DESIGN WIND SPEED IS 80 MPH. DESIGN FOR FATIGUE IS WAVED FOR STEEL MAST ARMS 50' OR SMALLER.
3. ARMS WILL SUPPORT ALL OF THE FOLLOWING:
   FIXED SIGNALS AT THE END OF ARM-WT.*100* PROJ. AREA*8.4 S.F.
   FIXED SIGNALS 1/3 OF LENGTH FROM END-WT.*100* PROJ. AREA*8.4 S.F.
   FIXED SIGN MIDWAY BETWEEN SIG'S-WT.*35* PROJ. AREA*12 S.F.
4. STANDARD WILL SUPPORT ONE 45' AND ONE 30' MAST ARM WITH ABOVE LOADING AND A MINIMUM ARM SEPARATION OF 45 , °OR ONE 65' ARM WITH ABOVE LOADING.
5. SIZE OF ARM SUPPLIED SHALL BE NOTED ON PLAN SHEET OR BID PROPOSAL.
6. ALL HEX NUTS, A-563 GRADE DH, SHALL BE INSTALLED BY "TURN OF THE NUT METHOD". SEAT NUT, THEN TORQUE MINIMUM *TURN.
7. STANDARD AND ARMS MUST BE ROUNDED OR MULTISIDED. (MINIMUM 8 SIDED).
8. CLAMP FOR ALL MAST ARMS MUST BE CAPABLE OF ACCOMMODATING VARIOUS STANDARD DIAMETERS (9.7" TO 10.2") WITHOUT AFFECTING LOAD CHARACTERISTICS OF ASSEMBLED UNIT. ALL CLAMPS MUST BE DESIGNED FOR ATTACHMENT TO ROUND OR MULTISIDED. CLAMP MUST BE CAPABLE OF ROTATIONAL ADJUSTMENT RIGHT AND LEFT FROM VERTICAL PLANE AND 360 ° ROTATIONAL ADJUSTMENT ABOUT MAST ARMS.
9. SUPPLY CERTIFICATION BY A LICENSED PROFESSIONAL ENGINEER WHICH INCLUDES DESIGN CALCULATIONS THAT STANDARD AND ARM DESIGN MEETS ALL SPECIFIED LOADING REQUIREMENTS.
10. ALL TELESCOPIC JOINTS SHALL BE WELDED TOGETHER BY THE MANUFACTURER. FOR ARM LENGTH IN EXCESS OF 43 FEET, ONE TELESCOPIC JOINT WITH THRU BOLT MAY BE ASSEMBLED IN THE FIELD.
11. ANCHOR BOLTS, LOCK WASHERS, FLAT WASHERS, NUTS, AND LEVELING NUTS, SHALL BE SUPPLIED WITH EACH POLE. LEVELING NUTS SHALL BE ASTM A-307.
12. DO NOT INSTALL POLE WITHOUT ARM.

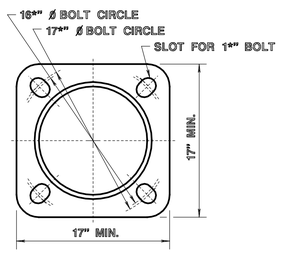

BASE DETAIL

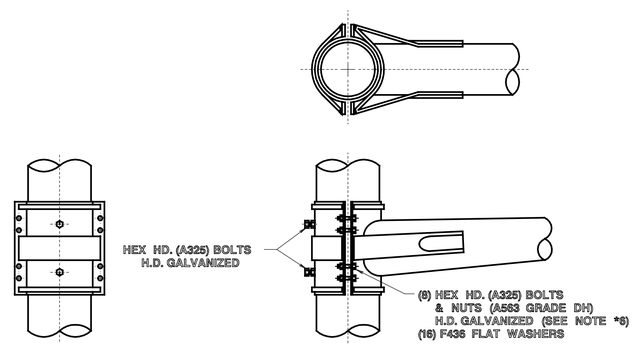

ARM CONNECTION DETAIL

NEW JERSEY DEPARTMENT OF TRANSPORTATION

ELECTRICAL DETAILS

N.T.S.

TRAFFIC SIGNAL STANDARD STEEL, AND ARM DETAILS FOR ELECTRICAL SIGNS

T-3407

REFERENCE

BDC07D-03