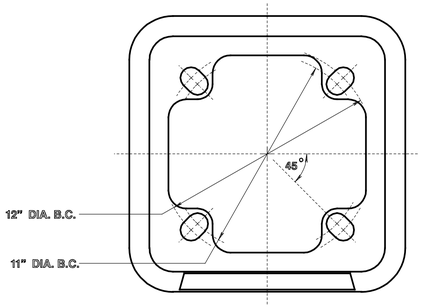

TOP VIEW

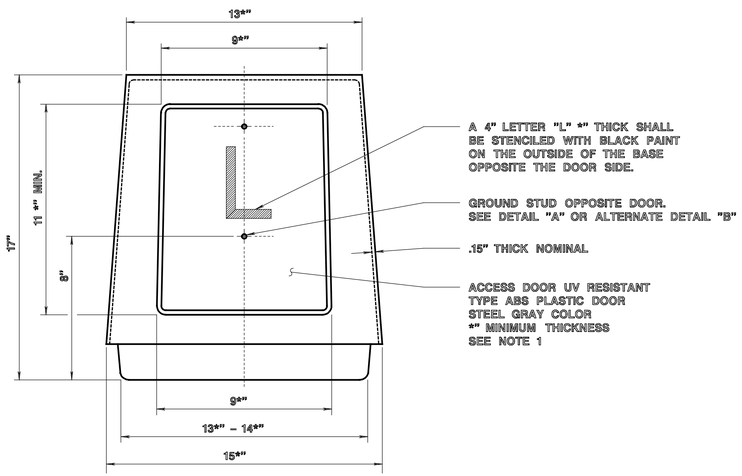

ELEVATION

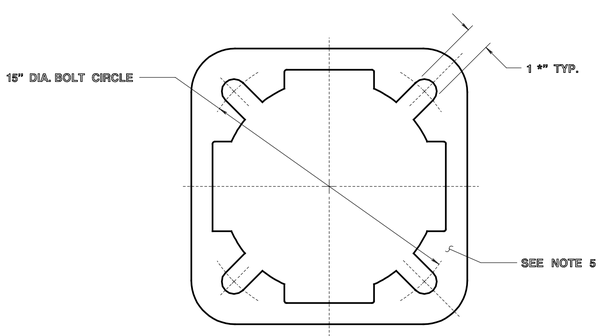

PLAN VIEW OF BASE

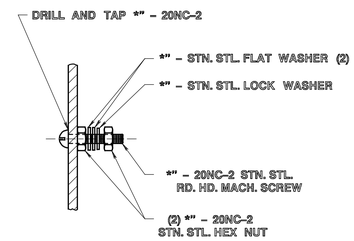

DETAIL "A"

GROUND STUD DETAIL

OPPOSITE DOOR OPENING

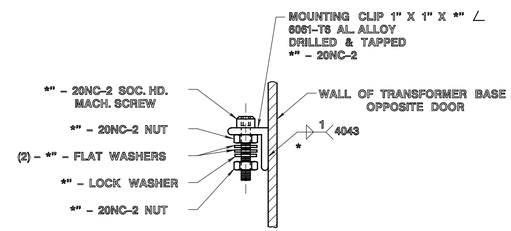

ALTERNATE DETAIL "B"

GROUND STUD DETAIL

OPPOSITE DOOR OPENING

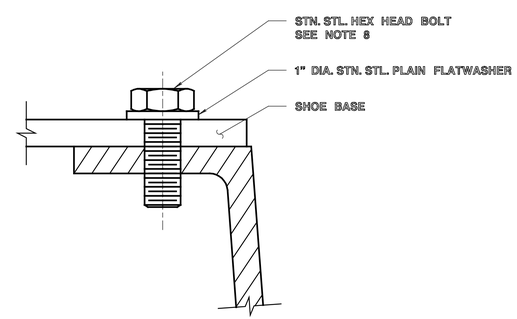

BOLTING DETAIL

NOTES

1. ATTACH DOOR TO BASE WITH AN APPROVED VANDAL RESISTANT LOCKING DEVICE USING A *" OR *" STN. STL. GRADE B8 SOCKET HD. CAP SCREW. AS AN ALTERNATE, A FIBERGLASS DOOR WITH UV INHIBITERS MAY BE UTILIZED.
2. HOLE SHALL BE OF SUFFICIENT DIAMETER TO ACCEPT 1" DIAMETER BOLTS.
3. FURNISH CERTIFICATIONS THAT ALUMINUM ALLOY AND TEMPER SHOWN MEET REQUIREMENTS AS SET FORTH BELOW OR AS OTHERWISE INDICATED ON DRAWING. ALUMINUM CASTINGS, PERMANENT OR SAND MOLD FOR TRANSFORMER BASE TRADE DESIGNATION 356–T6.
4. ALL DIMENSIONS OF CASTINGS SHALL BE * *".
5. UNDERSIDE OF TRANSFORMER BASE SHALL BE COATED WITH BITUMINIOUS PAINT.
6. DESIGN AND MANUFACTURE ACCORDING TO THE 2001 AASHTO STANDARD SPECIFICATIONS FOR STRUCTURAL SUPPORTS FOR HIGHWAY SIGNS, LUMINAIRES AND TRAFFIC SIGNALS. UTILIZE APPENDIX C OF THE SPECIFICATIONS FOR IDENTIFICATION OF LOADING CRITERIA. DESIGN WIND SPEED IS 80 MPH. DESIGN FOR FATIGUE IS WAVED.
7. THE LIGHTING STANDARD ASSEMBLY MUST BE CERTIFIED TO MEET 1985 AASHTO BREAKAWAY CRITERIA FOR STRUCTURAL SUPPORTS UTILIZING A TYPE APPROVED TRANSFORMER BASE.
8. DIAGRAM IS FOR METHOD OF INSTALLATIOIN.
9. THE MANUFACTURER SHALL SUPPLY ALL OTHER HARDWARE WHICH HE DEEMS NECESSARY TO INSTALL THE BASE AS WELL AS INSTRUCTION FOR INSTALLATION.

NEW JERSEY DEPARTMENT OF TRANSPORTATION

ELECTRICAL DETAILS

N.T.S.

LIGHTING ALUMINUM TRANSFORMER BASE PART No. TB–17 (BREAKAWAY)

L–2107

REFERENCE

BID07D-03