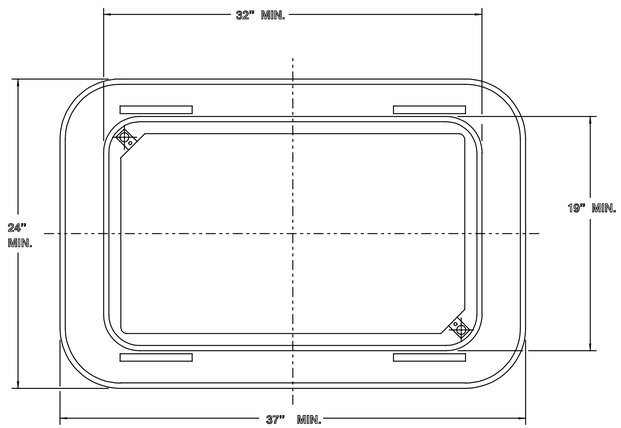

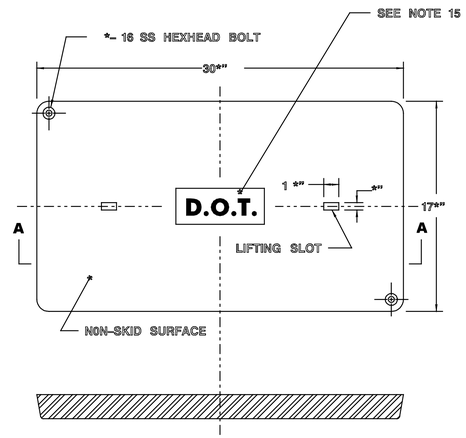

COVER

SECTION A–A

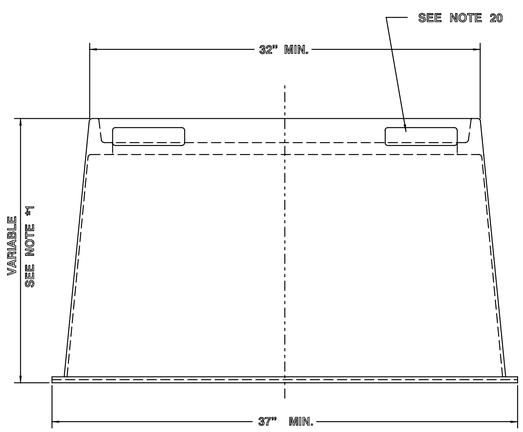

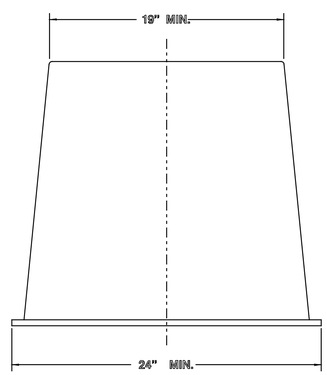

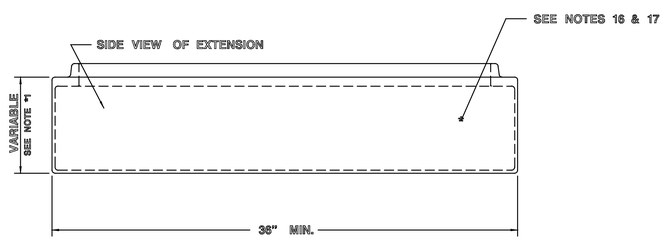

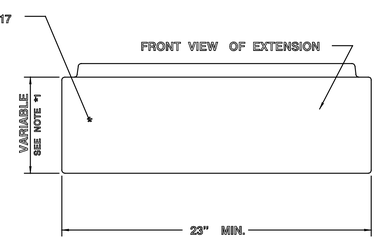

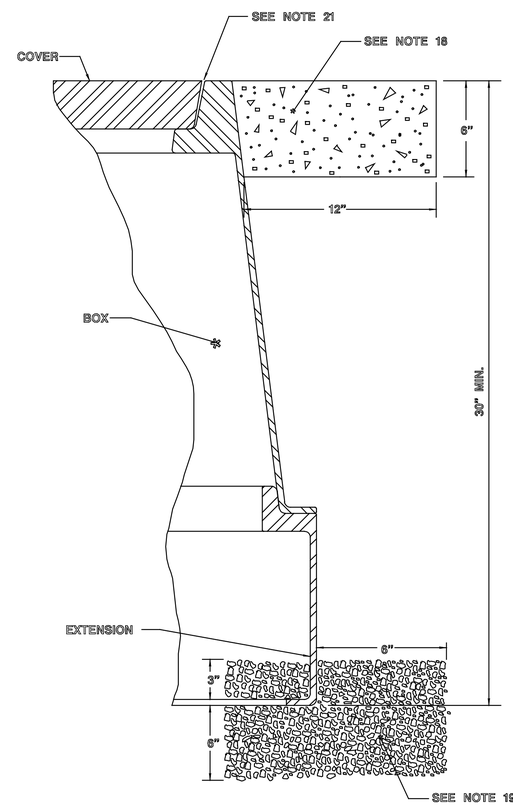

BASIC WALL LAYOUT

NOTES:

1. THE BOX DEPTH SHALL BE 18" MINIMUM AND THE EXTENSION DEPTH SHALL BE 8" MINIMUM. THE COMBINATION OF BOX AND ONE EXTENSION SHALL HAVE A MINIMUM DEPTH OF 30". AS AN ALTERNTE, A SINGLE SECTION JUNCTION BOX MAY BE SUPPLIED.
2. THE BOX SIDES SHALL BE TAPERED INWARD TOWARD THE TOP FOR STABILITY. BOX SHALL BE PROVIDED WITH A BOTTOM FLANGE AT LEAST 1" INCH WIDE TO PREVENT SETTLING IN FIRM SOIL WHEN SUBJECTED TO SPECIFIED LOADS. TOP REGION OF THE BOX SHALL BE CONFIGURED TO PROVIDE "KEYING-IN" AND LOCK THE BOX IN CONCRETE OR BLACKTOP WHEN IT IS INSTALLED. THREADED INSERTS PROVIDED FOR SECURING THE LID SHALL BE STAINLESS STEEL.
3. THE COVER SHALL BE FASTENED TO THE BOX WITH TWO *" -16NC STAINLESS STEEL HEX BOLTS, LOCATED AT OPPOSITE CORNERS OF THE COVER. BOLTS SHALL BE CAPTIVE TO LID.
4. COVER SURFACE SHALL BE SKID RESISTANT WITH A COEFFICIENT OF FRICTION OF AT LEAST 0.5.
5. EXTENSION SHALL FIT THE BOTTOM OF THE BOX; ITS DESIGN SHALL BE SUCH AS TO REINFORCE THE BOX AGAINST SIDE LOADS WHEN THE TWO ARE STACKED TOGETHER.
6. THE BOX ASSEMBLY SHALL BE DESIGNED FOR A8 LOADING AS SPECIFIED IN ASTM C857-87 "MINIMUM STRUCTURAL DESIGN LOADING FOR UNDERGROUND PRECAST CONCRETE UTILITY STRUCTURES." THE MINIMUM ULTIMATE LOAD SHALL BE 20,800 LB. MINIMUM.
7. DESIGN SHALL BE BASED ON A MINIMUM SAFETY FACTOR OF 2.0 FOR WHEEL LOADS AND 2.0 FOR SOIL LOADS. COVER DEFLECTION AT DESIGN LOADS SHALL NOT EXCEED 0.5 INCHES OF NET COVER DEFLECTION WIDTH AND SIDE WALL DEFLECTION SHALL NOT EXCEED 0.25 INCHES PER FOOT OF COVER WIDTH AND SIDE WALL DEFLECTION SHALL NOT EXCEED 0.25 INCHES PER FOOT OF BOX LENGTH. COMPLIANCE TESTING, IF REQUIRED, SHALL BE PERFORMED ACCORDING TO CURRENT WESTERN UNDERGROUND COMMITTEE GUIDE No. 3.6, NON-CONCRETE ENCLOUSRE.
8. ANY POINT ON THE COVER, BOX OR EXTENSION SHALL WITHSTAND A 70 FT. LBS. IMPACT ADMINISTERED WITH A C-TUP ACCORDING TO ASTM D-2444.
9. A MINIMUM OF 20 YEARS LIFE EXPECTANCY IS REQUIRED. ACCELERATED SERVICE TESTS IN ACCORDANCE WITH ASTM METHOD D-756-56 PROCEDURE E, SHALL BE ACCEPTED AS A SATISFACTORY ALTERNATIVE.
10. THE JUNCTION BOX SHALL BE MADE OF FIBER GLASS, RPM/FRP COMBINATION OR POLYMER CONCRETE AND THE COVER SHALL BE MADE OF FIBER GLASS REINFORCED POLYMER CONCRETE.
11. THE MATERIALS UTILIZED IN THE MANUFACTURE OF JUNCTION BOXES AND COVERS SHALL BE RESISTANT TO CHEMICALS COMMONLY FOUND IN THE SOIL OR IN THE OPERATING ENVIRONMENT. THEY MUST ALSO BE RESISTANT TO SUNLIGHT AND UV IN ACCORDANCE WITH ASTM G53. CHEMICAL RESISTANCE PROPERTIES SHALL BE DETERMINED USING ASTM D543 AND ASTM D570 FOR WATER ABSORPTION.
12. THE MATERIALS SHALL BE RESISTANT TO FIRE, INCLUDING DIRECT FLAME AND HEAT IN ACCORDANCE WITH ASTM D635.
13. THE JUNCTION BOX SHALL BE USABLE, WITHOUT ANY DETRIMENTAL EFFECT IN ANY KIND OF CLIMATE, IN A TEMPERATURE RANGE OF -40 ° TO + 149 F.°SUDDEN TEMPERATURE CHANGES SHALL NOT AFFECT THE HANDHOLE INCLUDING ITS LIFE EXPECTANCY.
14. THE COLOR OF THE COVER AND THAT PART OF THE BOX THAT IS VISIBLE WHEN IT IS INSTALLED, SHALL BE "CONCRETE GREY."
15. IDENTIFICATION OF THE COVER SHALL BE PERMANENTLY MOLDED ON THE TOP SURFACE WITH DOT. JUNCTION BOX COVER WITHOUT D.O.T. LOGO SHALL BE UTILIZED FOR ALL LOCAL SIGNALIZED INTERSECTIONS AND BRIDGES ON LOCAL ROADS.
16. ALL CONDUIT ENTRANCES INTO THE JUNCTION BOX SHALL BE FIELD DRILLED WITH A HOLE SAW OR PUNCHED OUT USING A HYDRAULIC HOLE PUNCH UNLESS OTHERWISED DIRECTED BY THE ENGINEER.
17. ALL CONDUIT OPENINGS SHALL BE SANDED. AFTER THE CONDUITS ARE INSTALLED, ALL CONDUIT ENTRANCES SHALL BE SEALED WITH AN EPOXY PUTTY OR SILICON CAULK.
18. IN GRASS OR DIRT AREAS, A CONCRETE PAD, CLASS "B", SHALL BE POURED AROUND THE TOP OF THE JUNCTION BOX.
19. COMPACTED *" GRAVEL OR BROKEN STONE REQUIRED.
20. A CONCRETE LOCK-IN FEATURES SHALL BE PROVIDED AT THE TOP OF THE BOX. ACTUAL DESIGN MAY VARY PER MANUFACTURER.
21. THE GAP FROM THE EDGE OF THE COVER TO THE INSIDE EDGE OF THE BOX SHALL BE A MAXIMUM OF *" * *".
22. TOP OF THE POLYMER CONCRETE COVER SHALL SET FLUSH WITH THE TOP OF THE JUNCTION BOX.
23. THIS BOX IS USED FOR LOOP INSTALLATIONS ONLY.
24. THIS BOX IS NOT ALLOWED IN THE TRAVELED WAY OR SHOULDERS.

NEW JERSEY DEPARTMENT OF TRANSPORTATION

ELECTRICAL DETAILS

N.T.S.

17" X 30" COMPOSITION JUNCTION BOX

T-3807

REFERENCE

BDC07D-03