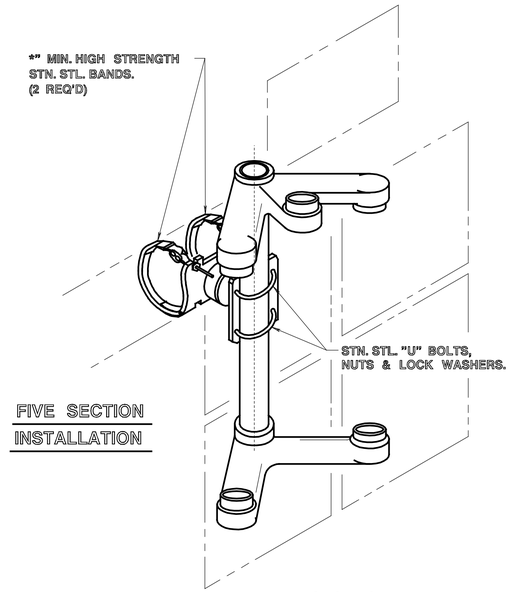


FIVE SECTION
INSTALLATION

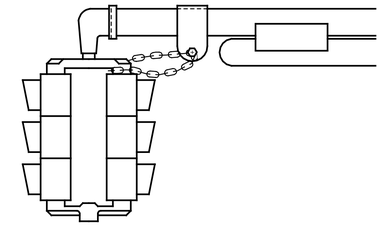

TYPICAL TRAFFIC SIGNAL INSTALLATION

## SAFETY CHAIN REQUIREMENTS FOR TRAFFIC SIGNALS

FURNISH:

42" LG. *" HOT DIPPED GALVANIZED COILPROOF STRAIGHT LINK CHAIN.
1 – *" ØX 2*" LG. STAINLESS STEEL HEX HEAD BOLT.
2 – *" ØSTAINLESS STEEL HEX NUTS.
2 – *" ØSTAINLESS STEEL FLAT WASHERS.
1– *" ØSTAINLESS STEEL LOCK WASHER.

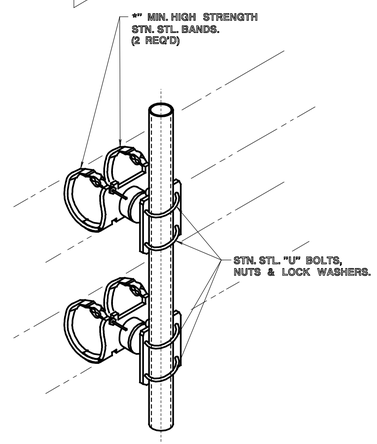


MID MAST BRACKET DETAIL

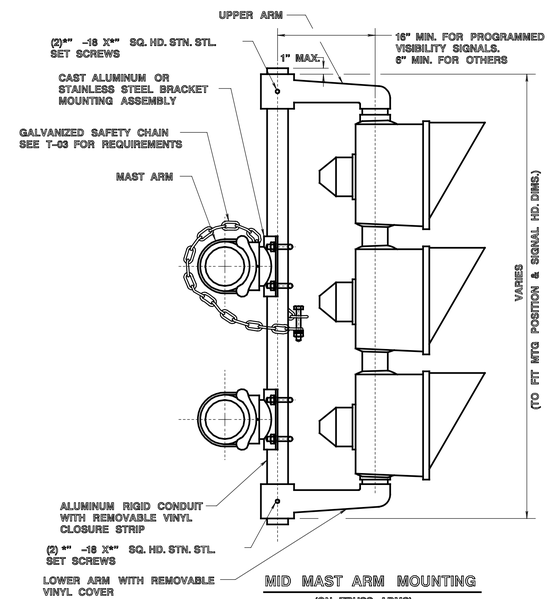


MID MAST ARM MOUNTING
(ON TRUSS ARMS)

NOTES:

1. TO MOUNT SIGNALS ON A PEDESTAL STANDARD INVERT 3 IN LINE BRACKETS WITH PIPE AND ELBOWS, USE A 4*" SLIPFITTER IN PLACE OF THE MAST ARM PLUMBIZER.
2. TO MOUNT 8" SIGNALS BACK TO BACK WITH 12" SIGNALS USE SPACER NIPPLES ON BOTTOM. RED SIGNALS SHALL BE IN LINE.
3. TO MOUNT BACK TO BACK OPTICALLY PROGRAMMED SIGNALS USE MID MAST BRACKET.
4. DESIGN AND MANUFACTURE ACCORDING TO THE 2001 AASHTO STANDARD SPECIFICATIONS FOR STRUCTURAL SUPPORTS FOR HIGHWAY SIGNS, LUMINAIRES AND TRAFFIC SIGNALS. UTILIZE APPENDIX C OF THE SPECIFICATIONS FOR IDENTIFICATION OF LOADING CRITERIA. DESIGN WIND SPEED IS 80 MPH. DESIGN FOR FATIGUE IS WAVED.

NEW JERSEY DEPARTMENT OF TRANSPORTATION

ELECTRICAL DETAILS
N.T.S.

OPTICALLY PROGRAMMED AND MIDMAST
MOUNTING DETAILS

T–2107

REFERENCE

BDG07D-03