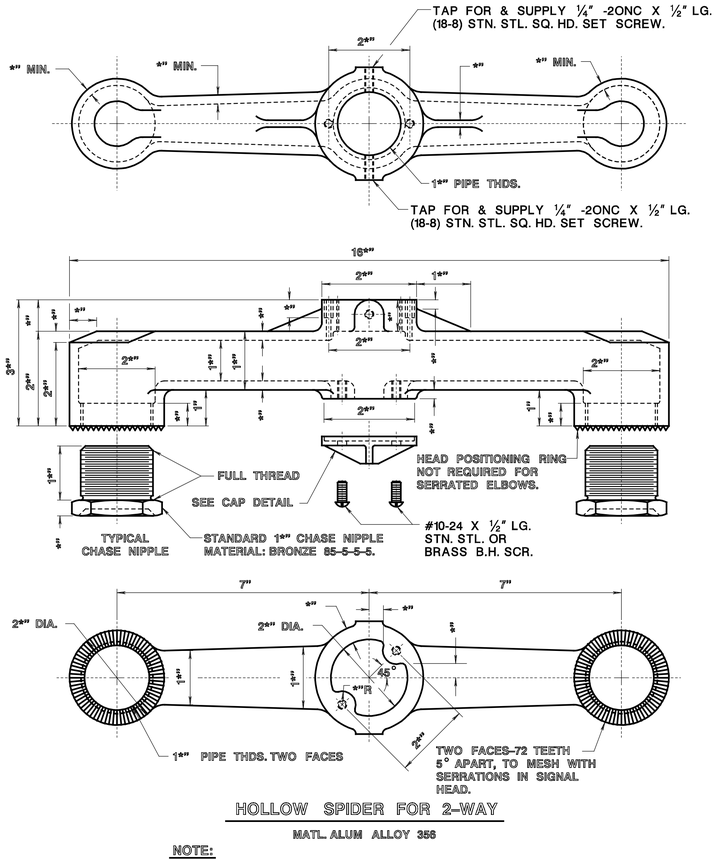

HOLLOW SPIDER FOR 2-WAY

MATL. ALUM ALLOY 356

NOTE:

1. EACH HOLLOW SPIDER FOR 2-WAY ASSEMBLY:
   - (1)-2-WAY SPIDER
   - (2)-STANDARD 1*" CHASE NIPPLE, BRONZE 85-5-5-5
   - (1)-CAP
   - (2)-10-24 X *" LG. STN. STL. OR BRASS BH. SCREWS
   - (2)-HEAD POSITIONING RINGS, IF NON-SERRATED HUBS
   - (1)-T-BAR ASSEMBLY (SEE T-BAR NOTE 2)

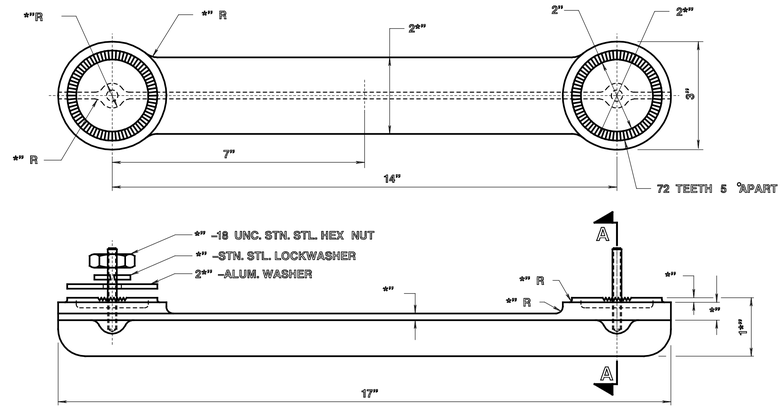

T-BAR

MATL. ALUM ALLOY 356

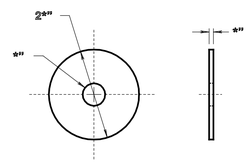

WASHER

MATL. ALUMINUM

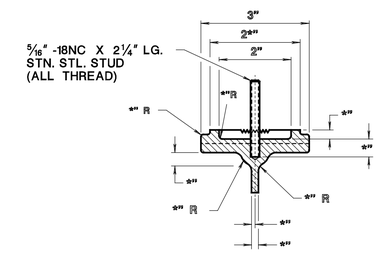

SECTION A-A

NOTES:

1. EACH T-BAR ASSEMBLY:
   - (1)-T-BAR
   - (2)-WASHERS
   - (2)-*" DIA. STN. STL. LOCKWASHERS
   - (2)-*" -18NC STN. STL. HEX NUTS
2. FOR USE WITH 2-WAY HOLLOW SPIDER ASSEMBLIES WHERE SIGNAL FACES ARE SAME SIZE AND CONFIGURATION.

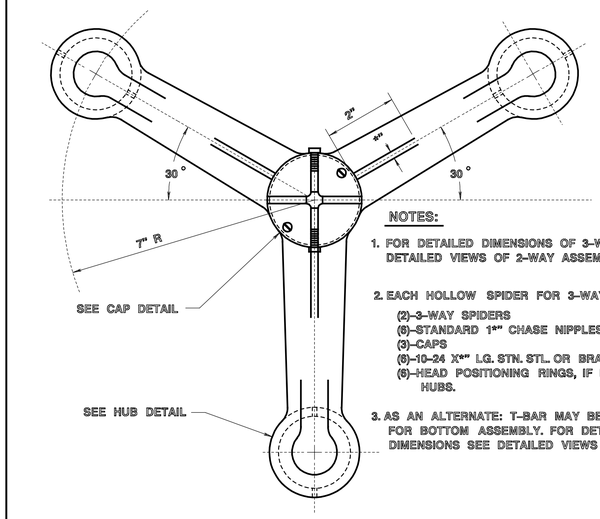

NOTES:

1. FOR DETAILED DIMENSIONS OF 3-WAY SPIDER SEE DETAILED VIEWS OF 2-WAY ASSEMBLY.
2. EACH HOLLOW SPIDER FOR 3-WAY ASSEMBLY:
   - (2)-3-WAY SPIDERS
   - (6)-STANDARD 1*" CHASE NIPPLES, BRONZE 85-5-5-5
   - (3)-CAPS
   - (6)-10-24 X*" LG. STN. STL. OR BRASS BH. SCREWS
   - (6)-HEAD POSITIONING RINGS, IF NON-SERRATED HUBS.
3. AS AN ALTERNATE: T-BAR MAY BE UTILIZED FOR BOTTOM ASSEMBLY. FOR DETAILED DIMENSIONS SEE DETAILED VIEWS OF T-BAR.

HOLLOW SPIDER FOR 3-WAY

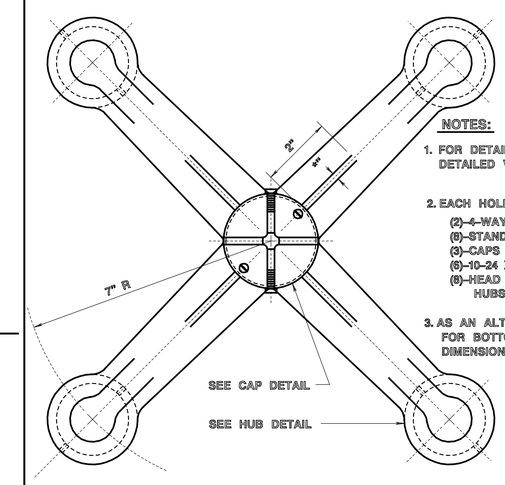

NOTES:

1. FOR DETAILED DIMENSIONS OF 4-WAY SPIDER SEE DETAILED VIEWS OF 2-WAY ASSEMBLY.
2. EACH HOLLOW SPIDER FOR 4-WAY ASSEMBLY:
   - (2)-4-WAY SPIDERS
   - (8)-STANDARD 1*" CHASE NIPPLES, BRONZE 85-5-5-5
   - (3)-CAPS
   - (6)-10-24 X*" LG. STN. STL. OR BRASS BH. SCREWS
   - (8)-HEAD POSITIONING RINGS, IF NON-SERRATED HUBS.
3. AS AN ALTERNATE: T-BAR MAY BE UTILIZED FOR BOTTOM ASSEMBLY. FOR DETAILED DIMENSIONS SEE DETAILED VIEWS OF T-BAR.

HOLLOW SPIDER FOR 4-WAY

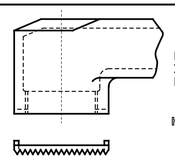

HOLLOW SPIDER HUB NON-SERRATED HUB (TYPICAL)

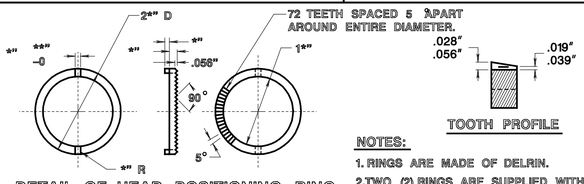

DETAIL OF HEAD POSITIONING RING

TOOTH PROFILE

NOTES:

1. RINGS ARE MADE OF DELRIN.
2. TWO (2) RINGS ARE SUPPLIED WITH NON-SERRATED ELBOWS OF SPIDER ASSEMBLIES.

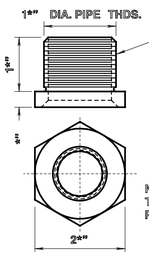

STANDARD 1*" CHASE NIPPLE

MTL. BRZ. 85-5-5-5

NIPPLE, ELBOW AND/OR CHASE NIPPLE TO BE USED WITH HINGE STRAP OR PEDESTRIAN CLAMP AS REQUIRED.

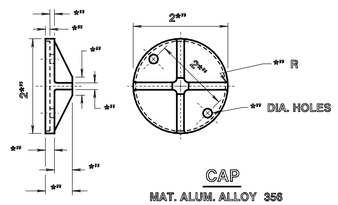

CAP

MAT. ALUM. ALLOY 356

PAINT

THE SURFACE OF THE ALUMINUM CASTING MUST BE CLEANED, DEGREASED AND SHOP PAINTED WITH ONE COAT OF ZINC CHROMATE-IRON-OXIDE PAINT CONFORMING TO THE CURRENT REQUIREMENTS OF SPECIFICATION M-142 OF AASHTO. WHEN THIS PAINT HAS THOROUGHLY DRIED, IT SHALL THEN BE SHOP PAINTED WITH A COAT OF YELLOW ENAMEL PAINT READY MIXED CONFORMING TO THE REQUIREMENTS OF FEDERAL SPECIFICATIONS 595A FOR ENAMEL; GLOSS, SYNTHETIC (FOR EXTERIOR AND INTERIOR SURFACES) CLASS A, AIR DRYING THE TINT OF WHICH SHALL MATCH GLOSS-YELLOW STANDARD COLOR NO. 13538, AS SHOWN IN THE FEDERAL SPECIFICATION 595A COLOR; (FOR READY MIXED PAINT).

NOTES:

1. DESIGN AND MANUFACTURE ACCORDING TO THE 2001 AASHTO STANDARD SPECIFICATIONS FOR STRUCTURAL SUPPORTS FOR HIGHWAY SIGNS, LUMINAIRES AND TRAFFIC SIGNALS. UTILIZE APPENDIX C OF THE SPECIFICATIONS FOR IDENTIFICATION OF LOADING CRITERIA. DESIGN WIND SPEED IS 80 MPH. DESIGN FOR FATIGUE IS WAVED.
2. ALL TOLERANCES OF CASTINGS SHALL BE *.
3. ALL STAINLESS STEEL BOLTS ON THIS SHEET PER ASTM A193 GRADE B8.

NEW JERSEY DEPARTMENT OF TRANSPORTATION

ELECTRICAL DETAILS

N.T.S.

DETAILS OF SIGNAL SPIDER AND T-BAR

T-0507

REFERENCE

BDC07D-03