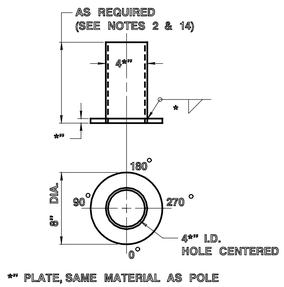

SKETCH "B"

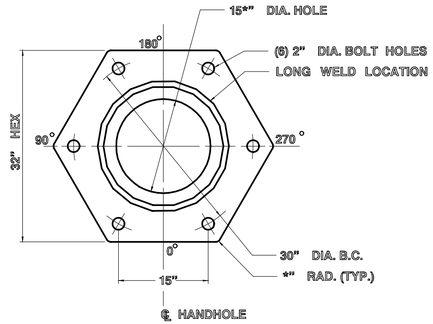

SECTION A–A

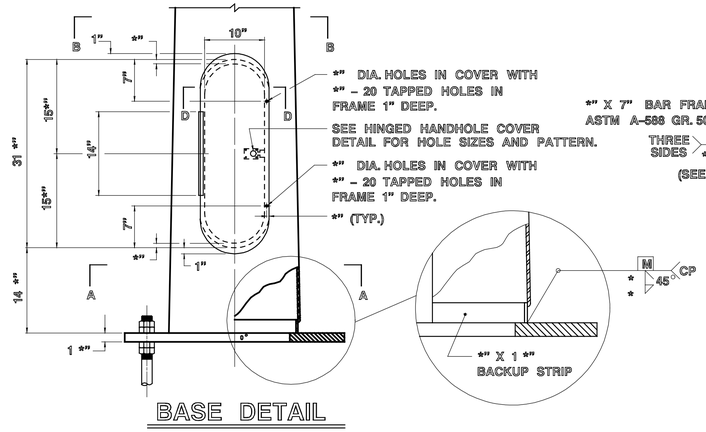

BASE DETAIL

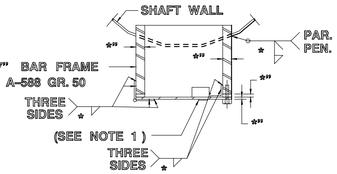

SECTION D–D

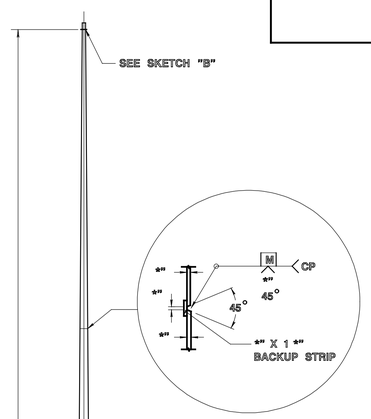

ELEVATION

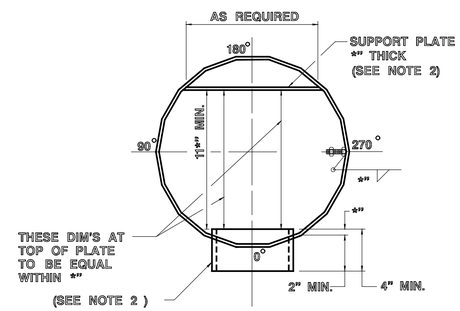

SECTION B–B

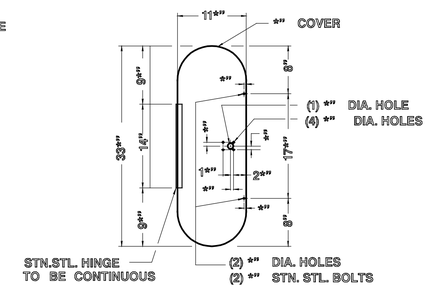

HINGED
HANDHOLE COVER

NOTES:

1. LOCK SHALL BE SUB-TREASURY LOCK NO. 03575 AND KEYED ALIKE FOR KEY NO.5 AVAILABLE FROM THE AMERICAN HARDWARE CO. OF NEW BRITAIN, CONN. OR A TUMBLER LOCK NO. 15481 ARS AND KEYED ALIKE FOR KEY NO.2 AVAILABLE FROM CORBIN LOCK CO. NEW BRITAIN, CONN.
2. DETAILS ARE SCHEMATIC. MODIFICATIONS ARE PERMITTED. ALL COMPONENTS MUST BE APPROVED BY THE NEW JERSEY DEPARTMENT OF TRANSPORTATION BEFORE ACCEPTANCE OF ONE UNIT.
3. NEOPRENE DOOR GASKET IS REQUIRED.
4. TOWER LIGHTING INSTALLED IN THE AREA BEYOND RECOVERY DISTANCE OR BEHIND THE GUIDE RAIL.
5. A GALVANIZED SCREEN, DOUBLE RAP AROUND THE BASE OF POLE IS REQUIRED.
6. THE GALVANIZED SCREEN SHALL HAVE NO MORE THAN *" OPENINGS AND HELD TOGETHER WITH STAINLESS STEEL NUTS, BOLTS AND FLAT WASHERS.
7. ALL WELDING IS TO BE DONE WITH E-80T-1 WIRE.
8. THE PIPE TENON SHALL BE WEATHERING STEEL COMPOSITION CONFORMING TO ASTM A588.
9. SLIP JOINTS ARE NOT PERMITTED IN THE MANUFACTURE OF THE UNIT.
10. ALL MISCELLANEOUS HARDWARE INCLUDING NUTS AND BOLTS ARE STAINLESS STEEL CONFORMING TO AISI 300 SERIES.
11. BOLT HEADS AND NUTS ARE HEXAGONAL.
12. 2 LEVELING HEX NUTS, 2 HOLD DOWN HEX NUTS AND ONE FLATWASHER PER ANCHOR BOLT.
13. GROUTING UNDER THE POLE IS NOT PERMITTED.
14. MANUFACTURER SHALL DETERMINE THE PROPER LENGTH TO PROVIDE A POSITIVE SEAT OF THE HEAD FRAME ASSEMBLY.
15. EACH SECTION SHALL HAVE ONLY ONE LONGITUDINAL SEAM.
16. ANCHOR BOLT MATERIAL SHALL BE ASTM A36, M55, WITH A 55,000 YIELD MIN.

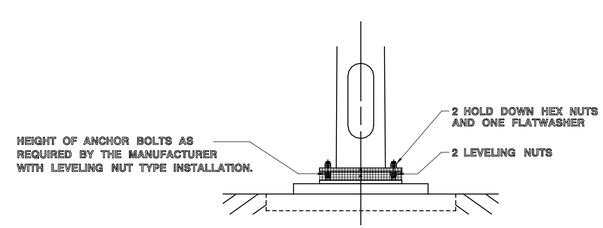

SKETCH "A"

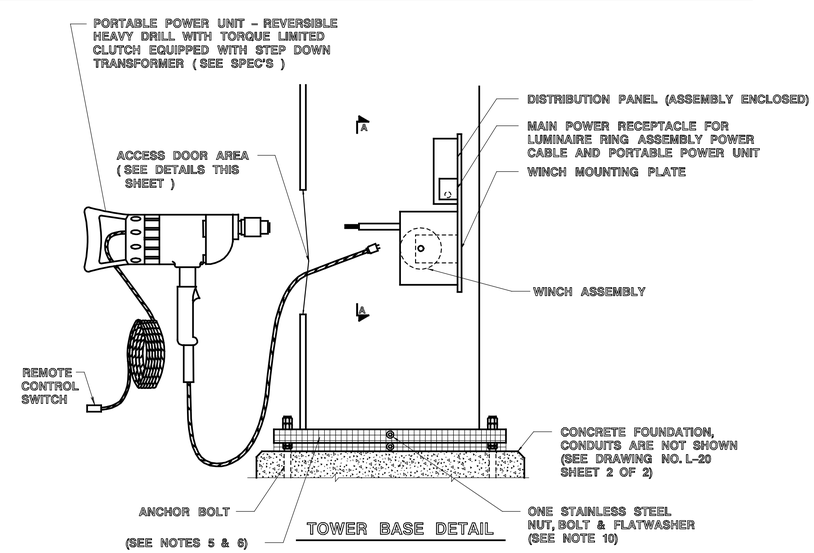

TOWER BASE DETAIL

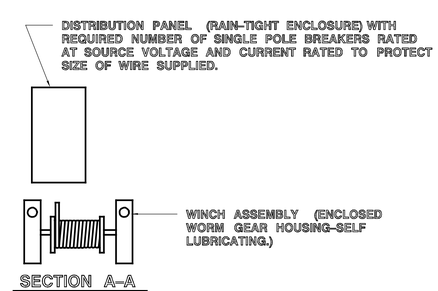

SECTION A–A

NEW JERSEY DEPARTMENT OF TRANSPORTATION

ELECTRICAL DETAILS

N.T.S.

TOWER LIGHTING

L–2007
SHEET 1 OF 2

REFERENCE

BDC07D-03