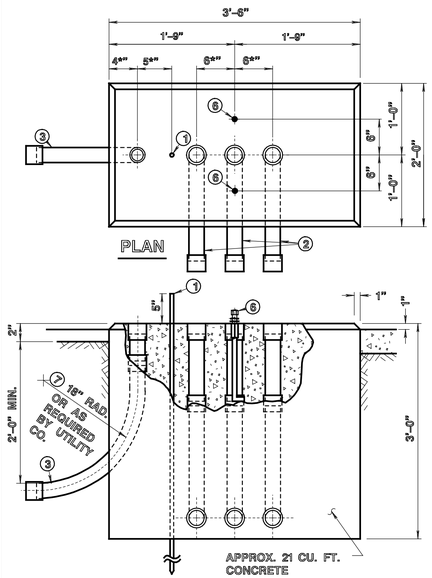

FOUNDATION TYPE "1-M"

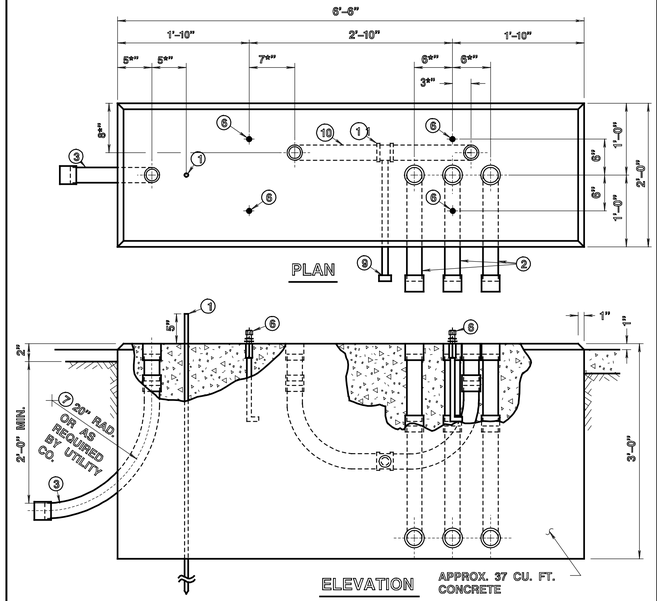

FOUNDATION TYPE "2-M"

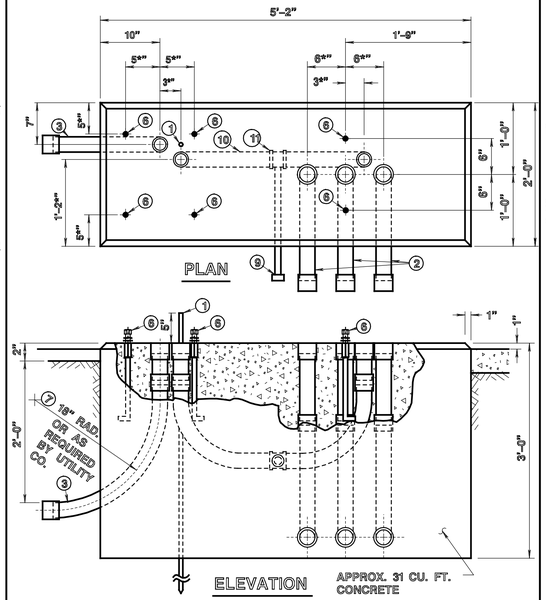

FOUNDATION TYPE "1M-MC"

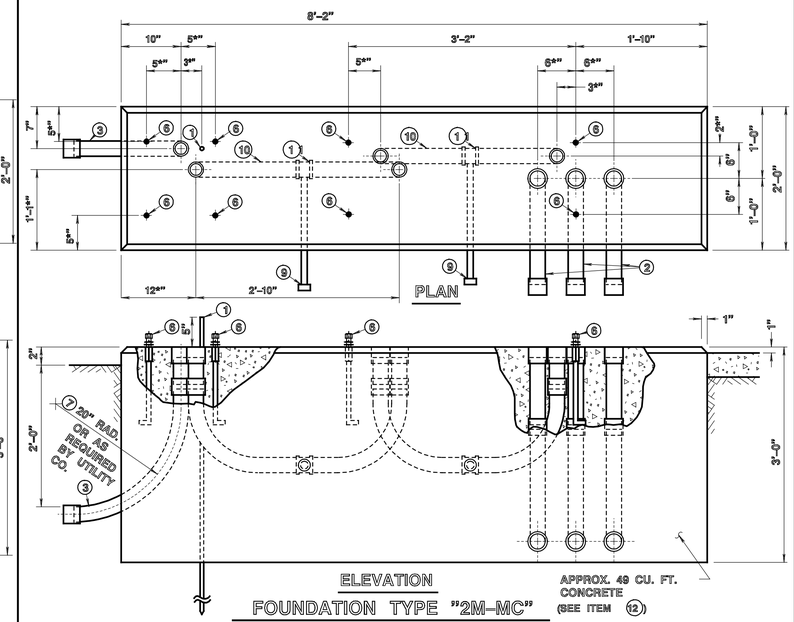

FOUNDATION TYPE "2M-MC"

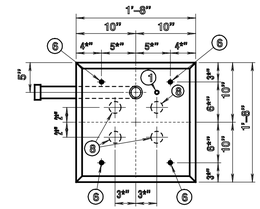

PLAN

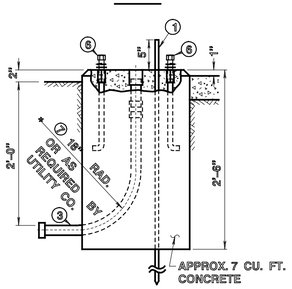

ELEVATION

FOUNDATION TYPE "MCF"

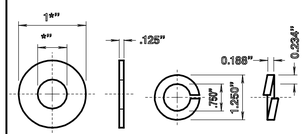

FLAT & LOCK WASHER

MAT'L - STN. STL.

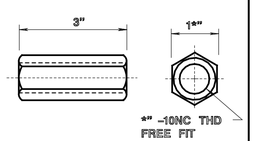

COUPLING

MAT'L - STEEL, GALVANIZED PER ASTM A-153

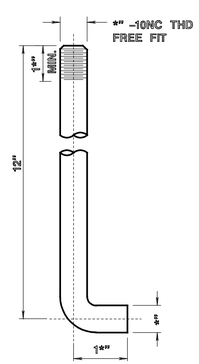

ANCHOR BOLT

MAT'L - STEEL PER ASTM A-576

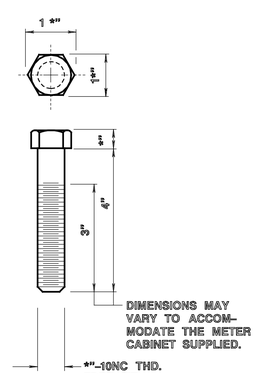

CAP SCREW

MAT'L - STN. STL. PER ASTM A-193 GRADE B-8

⑥ ANCHOR BOLT ASSEMBLY

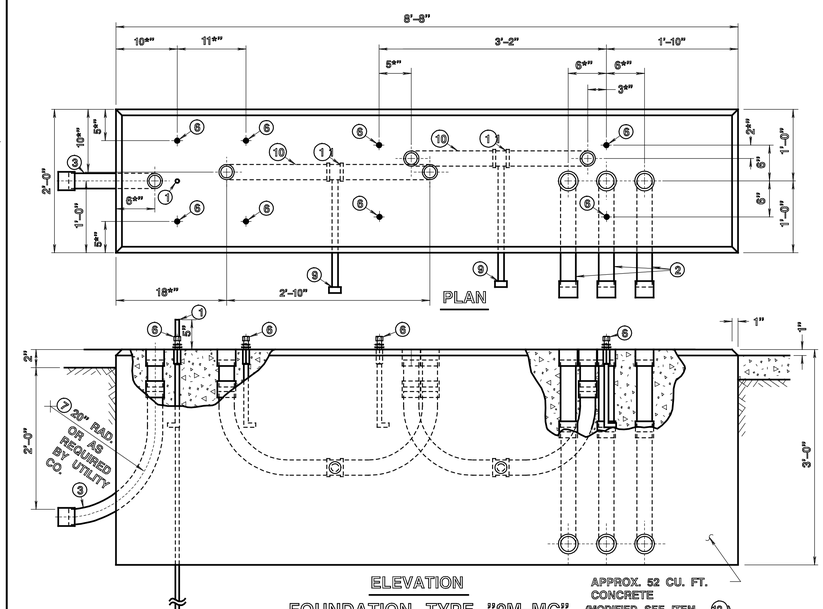

FOUNDATION TYPE "2M-MC"

NOTE: MUST BE UTILIZED WHEN RAINTIGHT DISCONNECT IS REQUIRED

ITEM

1. *" DIA. X 12 FT. LONG GROUND ROD.
2. 3" DIA. RIGID METALLIC CONDUIT.
3. RIGID METALLIC SERVICE CONDUIT. (SEE GENERAL CONSTRUCTION PLANS FOR DIRECTION AND SIZE.)
4. ALL CONCRETE CLASS "B"
5. PLUG/CAP ALL CONDUIT ENDS.
6. ANCHOR BOLT DETAIL AS SHOWN.
7. RADIUS - SUBJECT TO APPROVAL OF UTILITY COMPANY.
8. LOCATIONS FOR DISTRIBUTION CONDUITS - FOR NUMBER, SIZE AND POSITION SEE GENERAL PLANS.
9. DRAIN - 1" DIA. RIGID METALLIC CONDUIT. (PITCH DOWN TO JUNCTION BOX.)
10. 2" DIA. RIGID METALLIC CONDUIT.
11. 2" X 2" X 1" GALVANIZED TEE FITTING FOR DRAIN.
12. FOUNDATION AS REQUIRED BY UTILITY COMPANY.

NEW JERSEY DEPARTMENT OF TRANSPORTATION

ELECTRICAL DETAILS

N.T.S.

METER CABINET FOUNDATION

"1-M", "2-M", "1M-MC", "2M-MC" & "MCF"

L-0307

REFERENCE

BDC07D-03