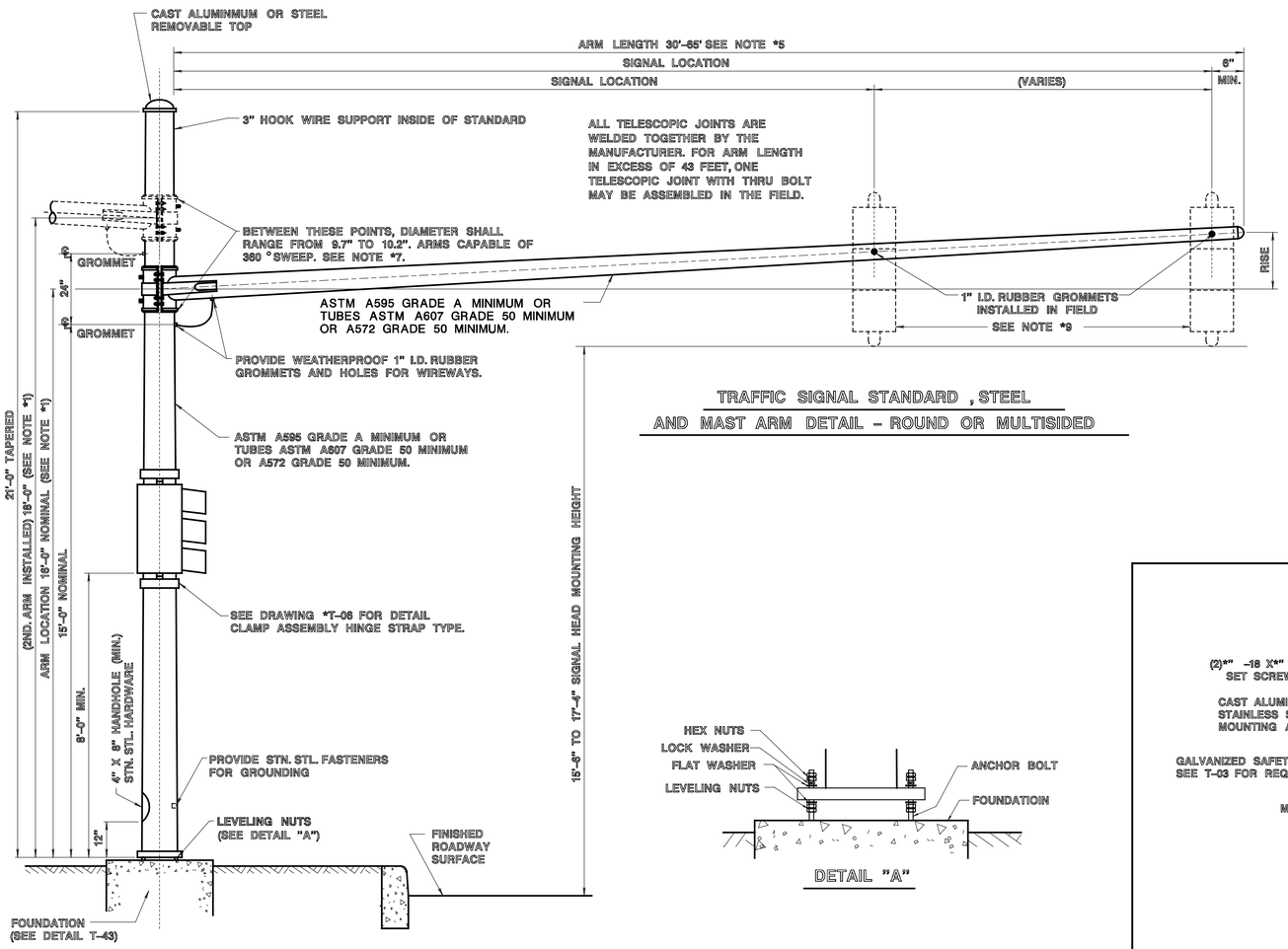

TRAFFIC SIGNAL STANDARD , STEEL
AND MAST ARM DETAIL – ROUND OR MULTISIDED

DETAIL "A"

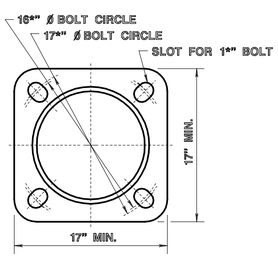

BASE DETAIL

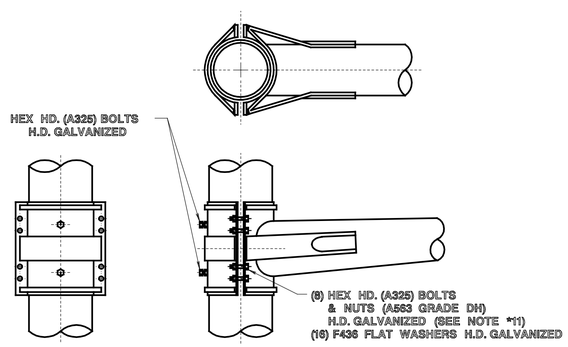

MAST ARM CONNECTION DETAIL

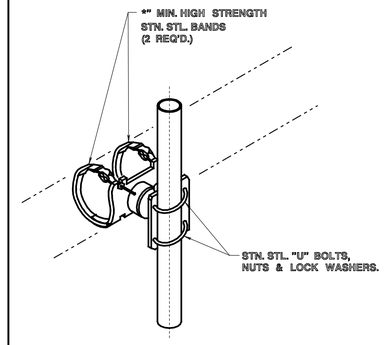

NOTE:

A. ALL HARDWARE IS STN. STL. EXCEPT AS NOTED.

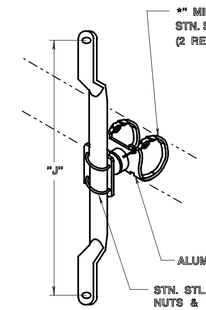

1. SIGN BRACKET SHALL PERMIT ROTATIONAL ADJUSTMENT ABOUT BRACKET AXIS, VERTICAL AND ROTATIONAL ADJUSTMENT ABOUT MAST ARM, AND ROTATIONAL ADJUSTMENT RIGHT & LEFT IN VERTICAL PLANE.
2. THE SIGN BRACKET SHALL BE DESIGNED TO SUPPORT A 350 LB. SIGN WITH A PROJECTED AREA OF 19 SQ. FT.
3. ALL MOUNTING HARDWARE SHALL BE STAINLESS STEEL.
4. TWO BRACKETS SHALL BE FURNISHED FOR EACH SIGN.

SIGN SIZE	DIM. "J"
12" X 60"	10"
24" X 30"	18"

ALUMINUM SIGN BRACKET DETAIL

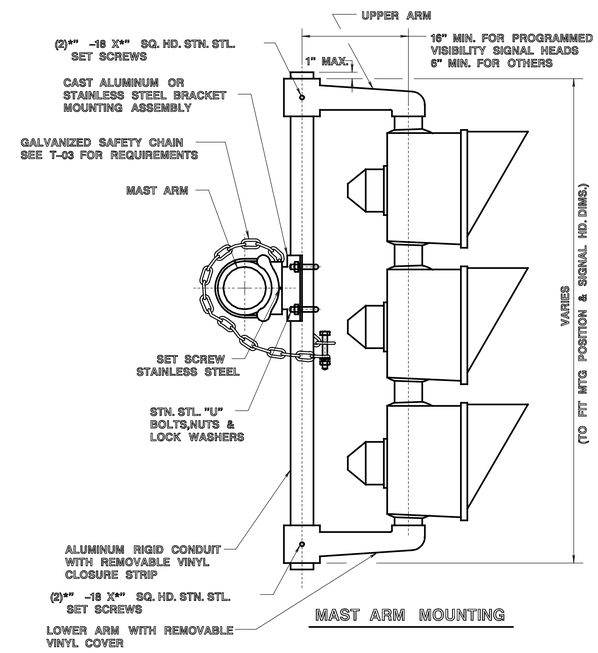

MAST ARM MOUNTING

NOTES:

1. STANDARD AND MAST ARMS ARE HOT DIPPED GALVANIZED STEEL. FINISH IN ACCORDANCE WITH SPECIFICATIONS ASTM A123.
2. DESIGN AND MANUFACTURE ACCORDING TO THE 2001 AASHTO STANDARD SPECIFICATIONS FOR STRUCTURAL SUPPORTS FOR HIGHWAY SIGNS, LUMINAIRES AND TRAFFIC SIGNALS. UTILIZE APPENDIX C OF THE SPECIFICATIONS FOR IDENTIFICATION OF LOADING CRITERIA. DESIGN WIND SPEED IS 80 MPH. DESIGN FOR FATIGUE IS WAVED FOR STEEL MAST ARMS 50 FEET AND SMALLER.
3. MAST ARMS WILL SUPPORT THE FOLLOWING (MAXIMUM LOADING):
   –FIXED SIGNALS BACK–TO–BACK AT THE END OF ARM, TOTAL WT. * 100 LBS., PROJ. AREA * 8.4 S.F.
   –FIXED SIGNALS BACK–TO–BACK AT A MINIMUM DISTANCE OF 1/3 THE ARM LENGTH FROM THE END, TOTAL WT. * 100 LBS. PROJ. AREA * 8.4 S.F.
   –FIXED SIGN (MAX. DEPTH * 2.0 FT.) MIDWAY BETWEEN SIGNALS, WT. * 70 LBS., PROJ. AREA * 12 S.F.
4. STANDARD WILL SUPPORT TWO MAST ARMS, ONE 45 FT. AND ONE 30 FT. IN LENGTH (MAX.) WITH THE ABOVE LOADING ON EACH ARM AND A MINIMUM ARM SEPARATION ANGLE OF 45 , OR ONE ARM WITH A MAXIMUM LENGTH OF 65' WITH THE ABOVE LOADING.
5. SIZE OF MAST ARM SUPPLIED NOTED ON PLAN SHEET OR BID PROPOSAL.
6. STANDARD AND MAST ARMS MUST BE ROUND OR MULTISIDED. (MINIMUM 8 SIDED).
7. CLAMP FOR ALL MAST ARMS CAPABLE OF ACCOMMODATING VARIOUS POLE DIAMETERS (9.7" TO 10.2") WITHOUT AFFECTING LOAD CHARACTERISTICS OF ASSEMBLED UNIT. ALL CLAMPS DESIGNED FOR ATTACHMENT TO ROUND OR MULTISIDED POLES. CLAMP CAPABLE OF ROTATIONAL ADJUSTMENT RIGHT AND LEFT FROM VERTICAL PLANE AND 360 ROTATIONAL ADJUSTMENT ABOUT MAST ARMS.
8. THE ARM LOCATION SHALL BE DETERMINED IN THE FIELD TO PROVIDE A ROADWAY CLEARANCE OF 15'-6" MIN. TO 17'-4" MAX. TO ALL INDICATIONS. THE DEPARTMANT WILL DETERMINE WHICH ARM MOUNTED AT THE TOP POSITION TO PROVIDE THE PROPER CLEARANCE.
9. ALL INDICATIONS SET PLUMB AND AT THE SAME ELEVATION.
10. SUPPLY CERTIFICATION BY A LICENSED PROFESSIONAL ENGINEER WHICH INCLUDES DESIGN CALCULATIONS THAT THE STANDARD AND MAST ARM DESIGN MEETS ALL SPECIFIED LOADING REQUIREMENTS.
11. ALL HEX NUTS, A563 GRADE DH, INSTALLED BY "TURN OF THE NUT METHOD", SEAT NUT, THEN TORQUE MINIMUM *TURN.
12. SUPPLY ANCHOR BOLTS, LOCK WASHERS, FLAT WASHERS, NUTS, AND LEVELING NUTS WITH EACH POLE. LEVELING NUTS ARE ASTM A307.
13. DO NOT INSTALL STANDARD WITHOUT ARM.

NEW JERSEY DEPARTMENT OF TRANSPORTATION

ELECTRICAL DETAILS
N.T.S.

TRAFFIC SIGNAL POLE STANDARD, STEEL
AND MAST ARM DETAILS

T–1107

REFERENCE

BDC07D-03