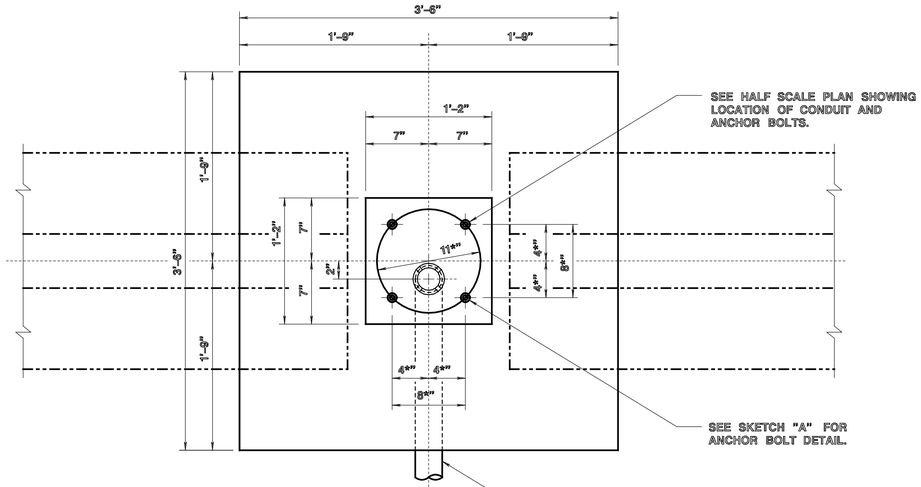

PLAN

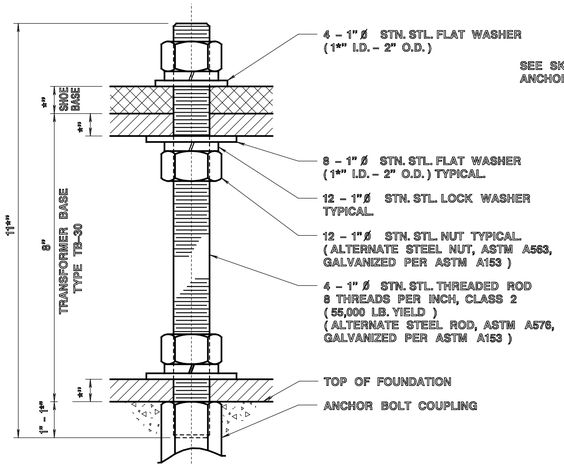

SKETCH "B"
THROUGH BOLT DETAIL
FOR THROUGH BOLTING

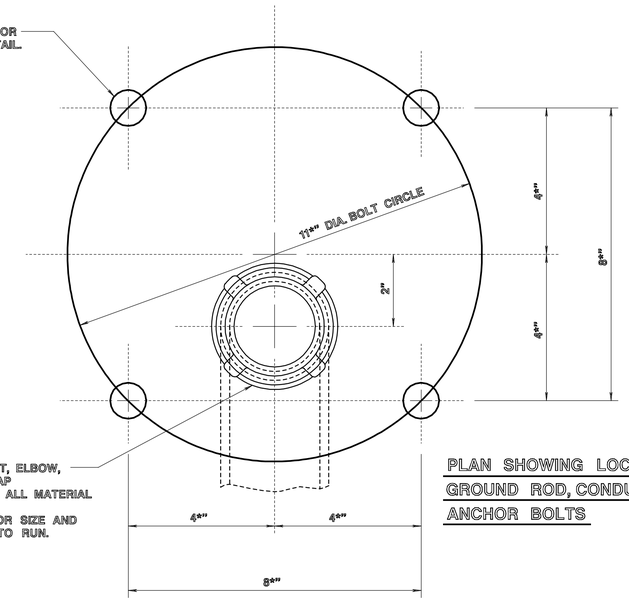

NOTE "A"

RIGID METALLIC CONDUIT, ELBOW, COUPLING, APPROVED CAP BONDING BUSHING ETC. ALL MATERIAL GALVANIZED.
SEE GENERAL PLANS FOR SIZE AND DIRECTION CONDUIT IS TO RUN.

PLAN SHOWING LOCATION OF GROUND ROD, CONDUIT AND ANCHOR BOLTS

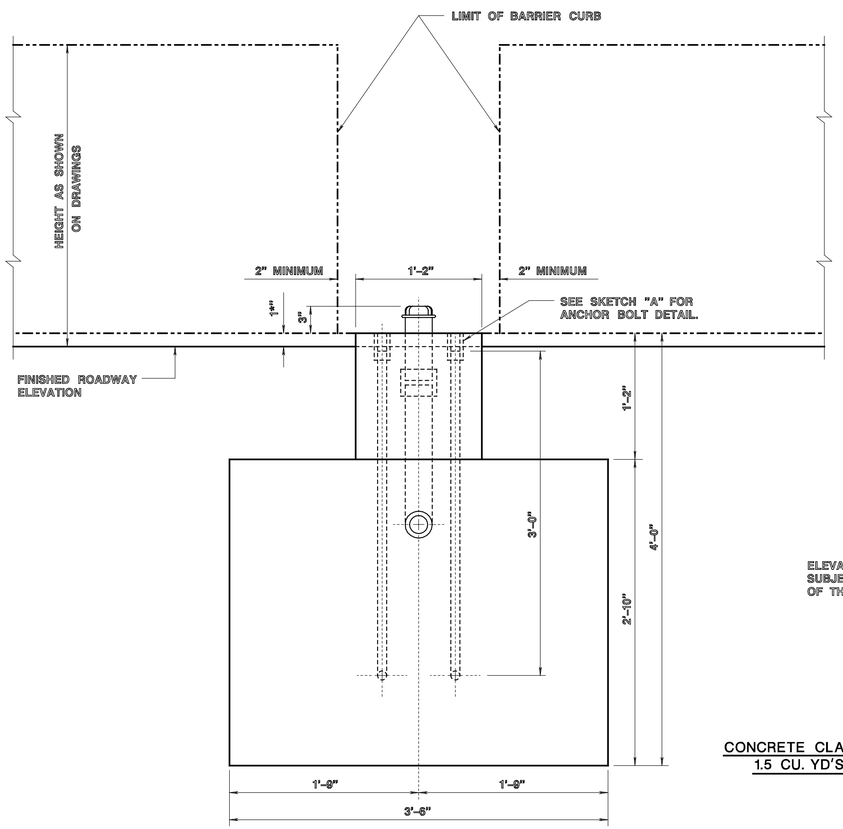

ELEVATION

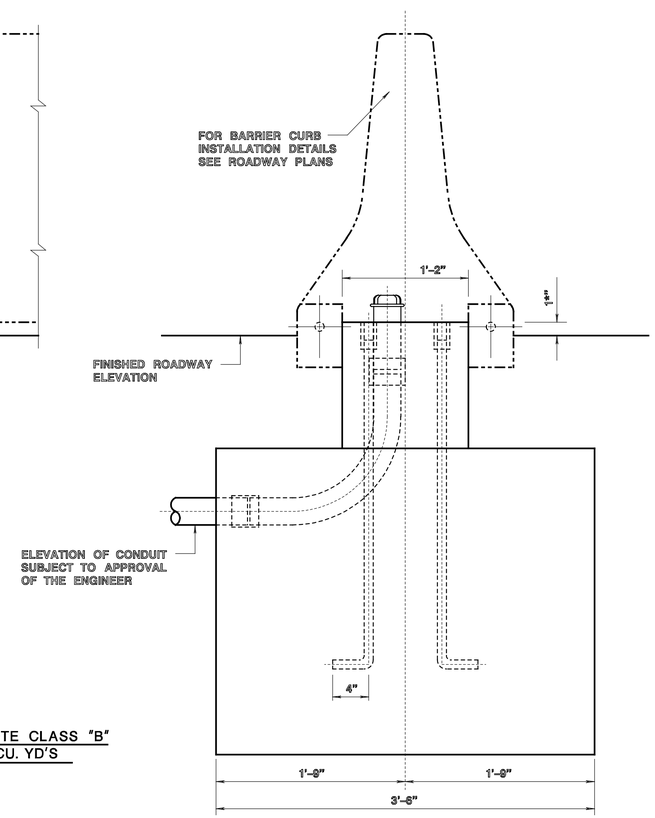

END VIEW

CONCRETE CLASS "B"
1.5 CU. YD'S

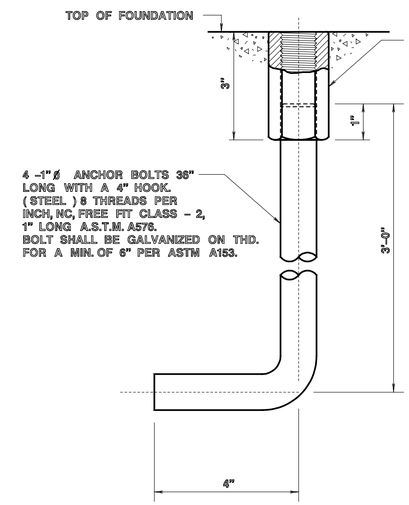

DETAIL OF ANCHOR BOLT
SKETCH "A"

NOTE:

THROUGH BOLTING IS REQUIRED WITH TB-30 BASE INSTALLATION.

NEW JERSEY DEPARTMENT OF TRANSPORTATION

ELECTRICAL DETAILS
N.T.S.

FOUNDATION TYPE "SFX"
BARRIER CURB

T-2907

REFERENCE

BDC07D-03