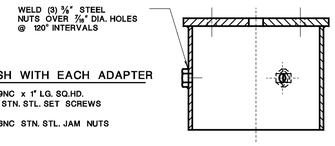

SECTION A-A

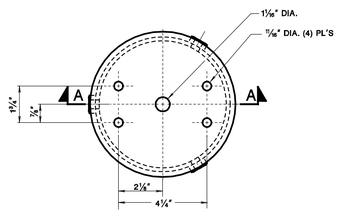

ALTERNATE STANDARD TOP (SEE NOTE #14)

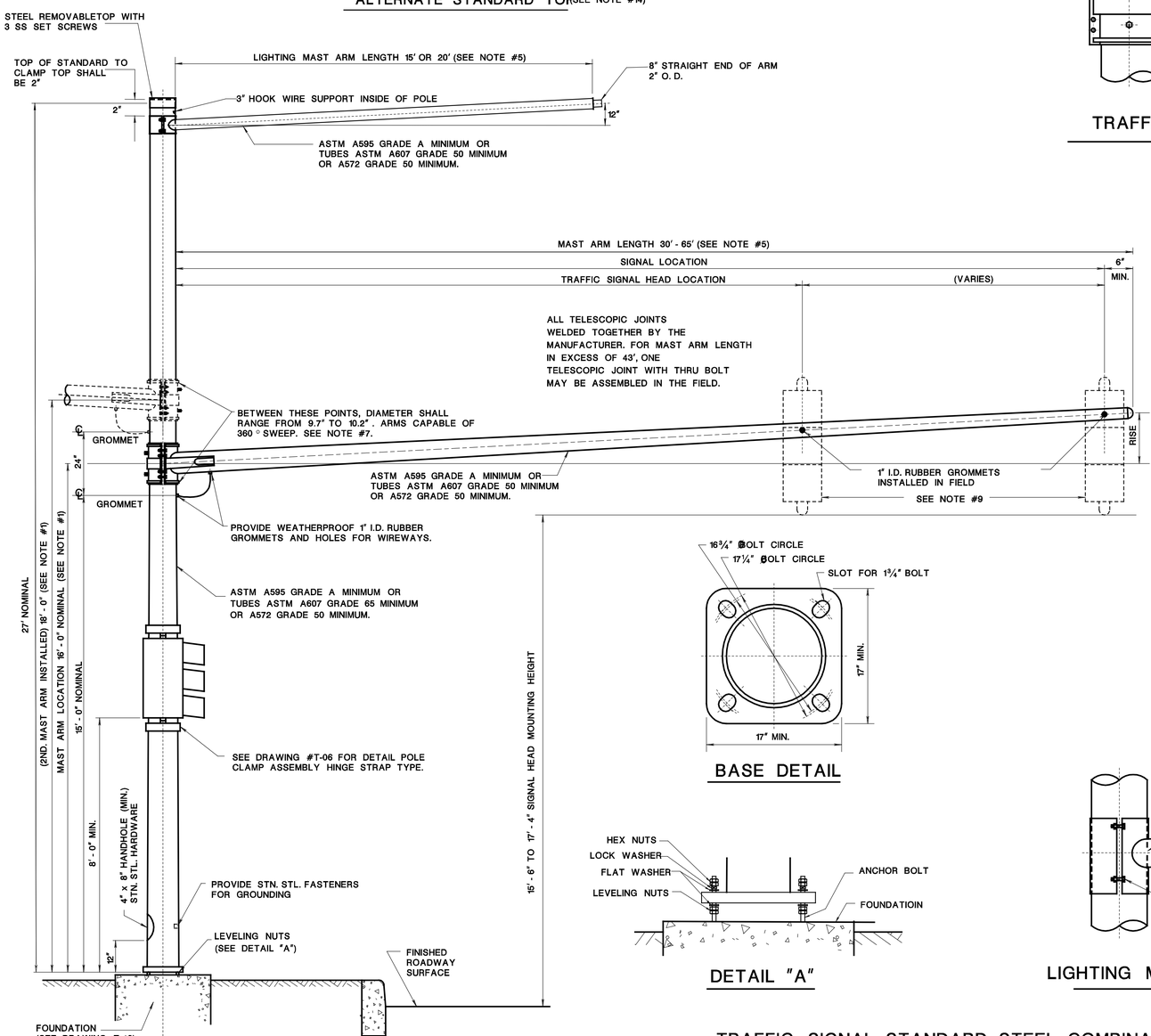

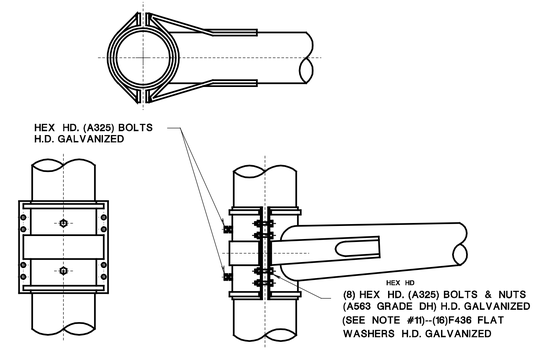

TRAFFIC MAST ARM CONNECTION DETAIL

NOTES:

1. ALL STANDARD AND MAST ARMS ARE HOT DIPPED GALVANIZED STEEL. FINISH IN ACCORDANCE WITH SPECIFICATIONS ASTM A123.
2. SPECIFICATIONS FOR STRUCTURAL SUPPORTS FOR HIGHWAY SIGNS, LUMINAIRES AND TRAFFIC SIGNALS. UTILIZE APPENDIX C OF THE SPECIFICATIONS FOR IDENTIFICATION OF LOADING CRITERIA. DESIGN WIND SPEED IS 80 MPH. DESIGN FOR FATIGUE IS WAVED FOR STEEL MAST ARMS 50 FEET AND SMALLER.
3. TRAFFIC MAST ARMS SUPPORT THE FOLLOWING (MAXIMUM LOADING):
   -FIXED SIGNALS BACK-TO-BACK AT THE END OF ARM, TOTAL WT. = 100 LBS., PROJ. AREA = 8.4 SQ. FT.
   -FIXED SIGNALS BACK-TO-BACK AT A MINIMUM DISTANCE OF 1/3 THE ARM LENGTH FROM THE END, TOTAL WT. = 100 LBS. PROJ. AREA = 8.4 SQ. FT.
   -FIXED SIGN (MAX. DEPTH = 2 FT.) MIDWAY BETWEEN SIGNALS, WT. = 70 LBS., PROJ. AREA = 12 SQ. FT.
   LIGHTING MAST ARM WILL SUPPORT THE FOLLOWING (MAXIMUM LOADING):
   -FIXED LUMINAIRE(1.4 SQ. FT. AND 20 LBS.)
4. STANDARD WILL SUPPORT ONE LIGHTING MAST ARM 20 FT. AND TWO TRAFFIC MAST ARMS ONE 45 FT. AND ONE 30 FT. IN LENGTH (MAX.) WITH THE ABOVE LOADING ON EACH ARM AND A MINIMUM ARM SEPARATION ANGLE OF 45°, OR ONE LIGHTING MAST ARM 20 FT. AND ONE TRAFFIC MAST ARM A MAXIMUM LENGTH OF 65 FT. WITH THE ABOVE LOADING.
5. SIZE OF MAST ARM(S) SUPPLIED SHALL BE NOTED ON PLAN SHEET OR BID PROPOSAL.
6. STANDARDS AND MAST ARMS MUST BE ROUND OR MULTISIDED (MINIMUM 8 SIDED)
7. CLAMP FOR ALL MAST ARMS CAPABLE OF ACCOMMODATING VARIOUS STANDARD DIAMETERS (9.2" TO 10.2") WITHOUT AFFECTING LOAD CHARACTERISTICS OF ASSEMBLED UNIT. ALL CLAMPS DESIGNED FOR ATTACHMENT TO ROUND OR MULTISIDED. CLAMP CAPABLE OF ROTATIONAL ADJUSTMENT RIGHT AND LEFT FROM VERTICAL PLANE AND 360° ROTATIONAL ADJUSTMENT ABOUT MAST ARMS.
8. THE MAST ARM LOCATION DETERMINED IN THE FIELD TO PROVIDE A ROADWAY CLEARANCE OF 15' - 6" MIN.TO 17' - 4" MAX. TO ALL TRAFFIC SIGNAL INDICATIONS. THE DEPARTMENT WILL DETERMINE WHICH ARM SHALL BE MOUNTED AT THE TOP POSITION TO PROVIDE THE PROPER CLEARANCE.
9. ALL INDICATIONS SET PLUMB AND AT THE SAME ELEVATION.
10. SUPPLY CERTIFICATION BY A NEW JERSEY LICENSED PROFESSIONAL ENGINEER BE SUPPLIED WHICH INCLUDES DESIGN CALCULATIONS THAT STANDARD AND ARM DESIGN MEETS ALL SPECIFIED LOADING REQUIREMENTS.
11. ALL HEX NUTS, A563 GRADE DH, INSTALLED BY TURN OF THE NUT METHOD*, SEAT NUT, THEN TORQUE MINIMUM ½TURN.
12. SUPPLY ANCHOR BOLTS, LOCK WASHERS, FLAT WASHERS, NUTS, AND LEVELING NUTS WITH EACH POLE. LEVELING NUTS SHALL BE ASTM A307.
13. FOR TRAFFIC SIGNAL HEAD AND SIGN MOUNTING DETAILS SEE T-11.
14. ALTERNATE STANDARD TOP SHALL BE USED WHEN THE PLANS OR SPECIFICATIONS REQUIRE AN OFFSET TYPE LUMINAIRE.
15. THE MANUFACTURER'S SHOP SHALL BE AISC CERTIFIED, CATEGORY I, CONVENTIONAL STEEL STRUCTURES AND SIMPLE BRIDGES.
16. THE MATERIAL FOR THE ALTERNATE STANDARD TOP SHALL BE THE SAME AS THE STANDARD.
17. DO NOT INSTALL STANDARD WITHOUT ARM.

BASE DETAIL

DETAIL "A"

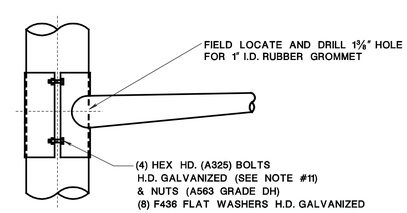

LIGHTING MAST ARM CONNECTION DETAIL

TRAFFIC SIGNAL STANDARD, STEEL COMBINATION
& MAST ARM DETAILS - ROUND OR MULTISIDED

NEW JERSEY DEPARTMENT OF TRANSPORTATION

ELECTRICAL DETAILS
N.T.S.

TRAFFIC SIGNAL STANDARD, SC
AND MAST ARM ASSEMBLY DETAILS

T-1307

REFERENCE

BDC07D-03