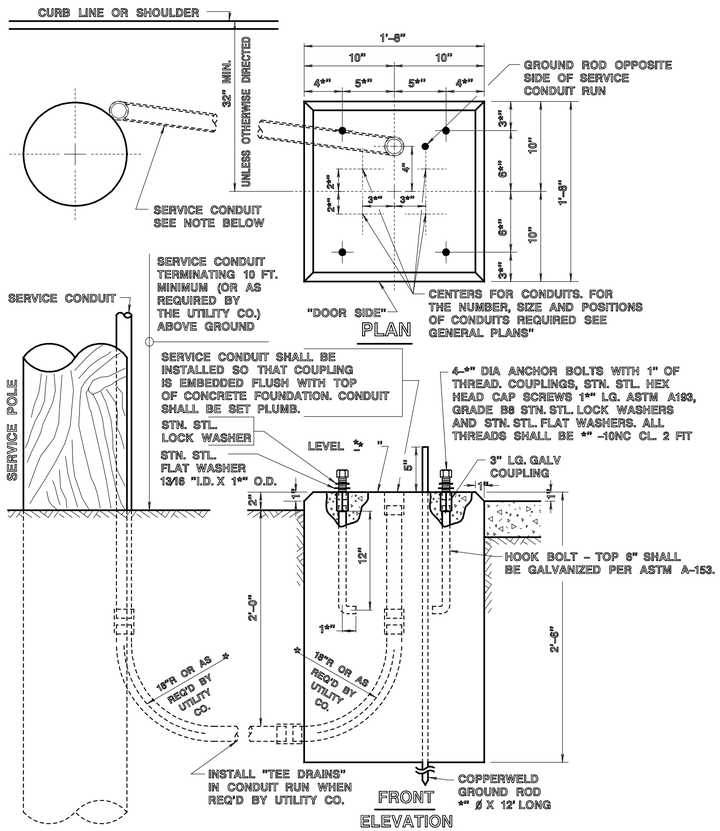

FOUNDATION TYPE "MCF"

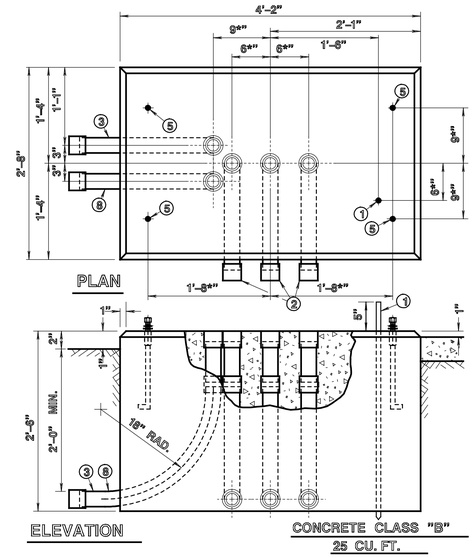

FOUNDATION TYPE "P"

ITEM

1. *" X 12' LG. GROUND ROD.
2. 3" DIA. RIGID METALLIC CONDUIT. (ALL SHALL EXTEND TO JUNCTION BOX)
3. RIGID METALLIC CONDUIT (SERVICE CONDUIT). SEE GENERAL PLAN FOR DIRECTION AND SIZE
4. 2" DIA. RIGID METALLIC CONDUIT (SERVICE CONDUIT)
5. *" DIA. ANCHOR BOLTS (SEE "SPF" FOUNDATION FOR DETAILS)
6. DRAIN 1" DIA. RIGID METALLIC CONDUIT (PITCH TO JUNCTION BOX).
7. 2" X 2" X 1" GALV. TEE FITTING.
8. RIGID METALLIC CONDUIT (INTERCONNECT CONDUIT). SEE GENERAL PLAN FOR DIRECTION AND SIZE IF NOT SPECIFIED 2" DIA. RMC SHALL BE INSTALLED.
9. 2" DIA. RIGID METALLIC CONDUIT (INTERCONNECT CONDUIT)

NOTES:

1. ALL CONDUIT SHALL BE INSTALLED SO THAT COUPLINGS ARE EMBEDDED PLUMB AND FLUSH WITH TOP OF CONCRETE FOUNDATION.
2. J-BOLT MUST BE INSERTED 1*" *" INTO 3" COUPLING
3. ALL FOUNDATIONS SHALL BE POURED MONOLITHIC

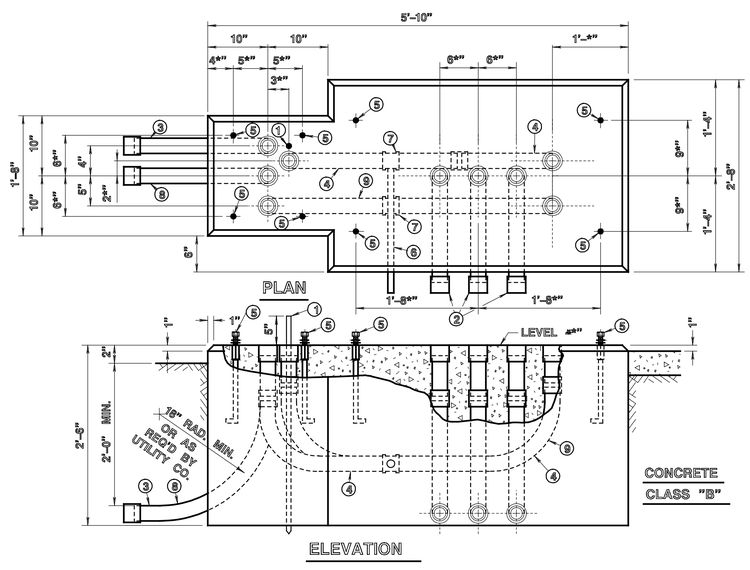

FOUNDATION TYPE "P-MC"

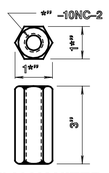

GALVANIZED COUPLING

GALV. PER ASTM A153
CONTINUOUS THREADS

NEW JERSEY DEPARTMENT OF TRANSPORTATION

ELECTRICAL DETAILS

N.T.S.

TYPICAL DETAILS FOR FOUNDATION MCF, P & P-MC

T-1607

REFERENCE

BDC07D-03