MATERIAL: 316 STAINLESS STEEL

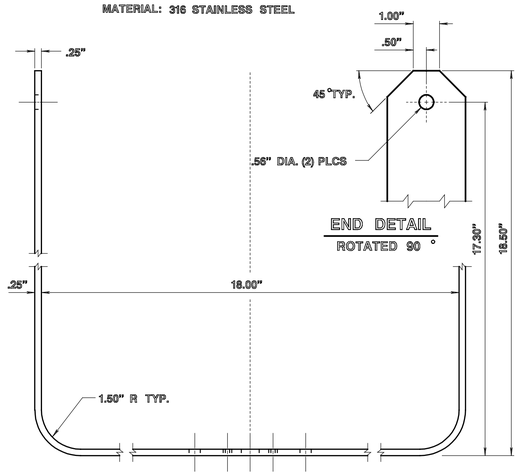

END DETAIL
ROTATED 90 °

YOKE DETAIL

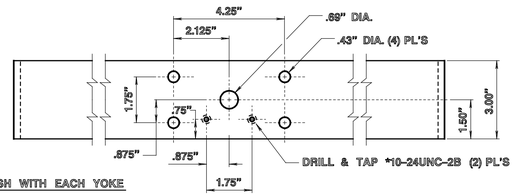

FURNISH WITH EACH YOKE

" -16 X 1" HEX HD. MACH. SCR. 18-8 STN. STL. FULL THD.
*" I.D. X *" O.D. X 16 GA. 18-8 STN. STL.
*" -16 HEX STOP NUT, NYLON INSERT 18-8 STN. STL.

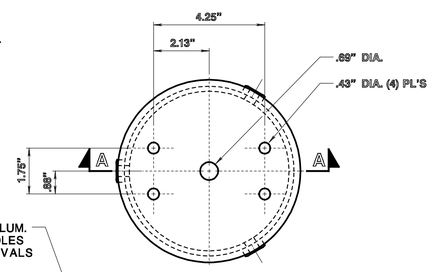

MOUNTING ADAPTER

WELD (3) ⅜" -16UNC ALUM. NUTS OVER .43" DIA. HOLES @ 120° INTERVALS

ALTERNATE

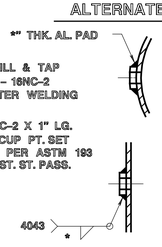

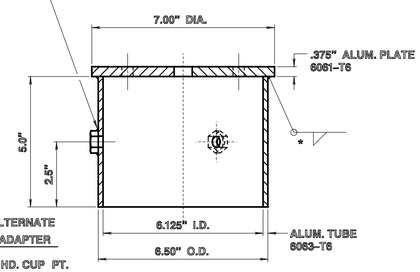

SEE ALTERNATE

SECTION A-A

FURNISH WITH EACH ADAPTER

(3) *" -16UNC X 1" SQ. HD. CUP PT. STN. STL. SET SCREWS

(3) *" -16UNC STN. STL. JAM NUTS

NOTE:

THE YOKE SHALL BE DESIGNED TO BE INSTALLED ON MOUNTING ADAPTER. A POSITIVE LOCKING DEVICE SHALL BE PROVIDED FOR VERTICAL ADJUSTMENT SUCH THAT WIND LOAD OF 80 MPH WITH A 1.3 GUST FACTOR WILL NOT AFFECT THE VERTICAL POSITION OF THE LUMINAIRE.

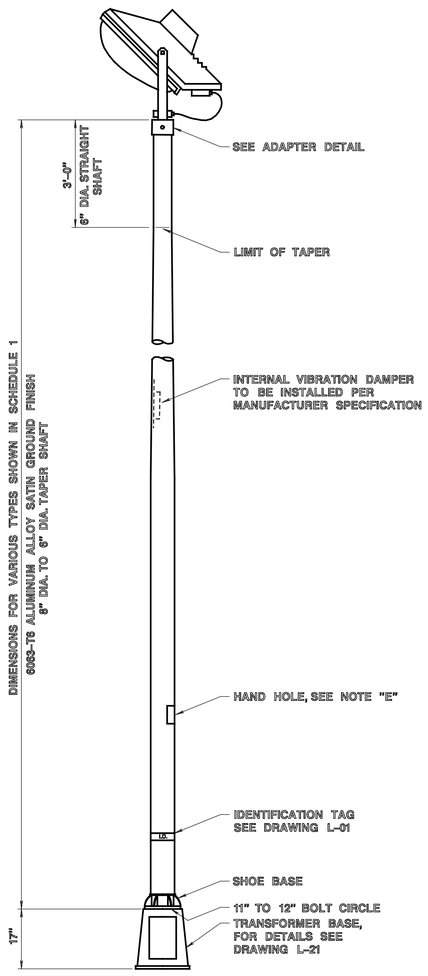

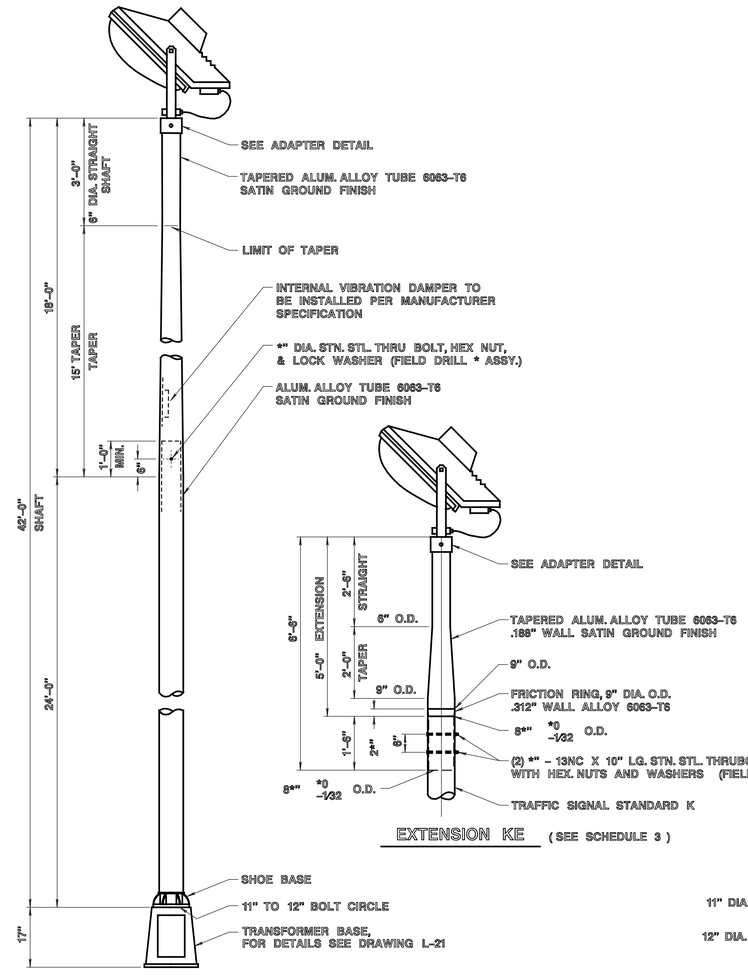

LIGHTING STANDARD

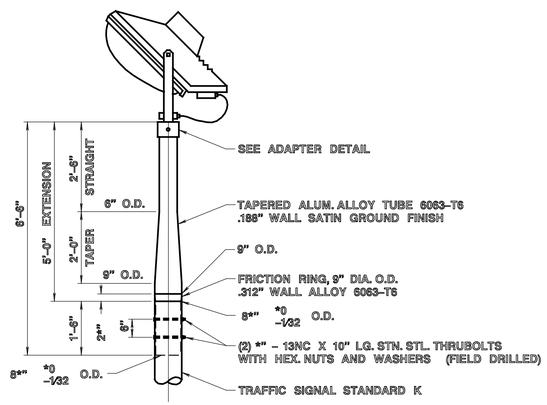

EXTENSION KE (SEE SCHEDULE 3)

NOTES:

A. FURNISH CERTIFICATIONS THAT ALUMINUM ALLOY AND TEMPER SHOWN MEET REQUIREMENTS AS SET FORTH BELOW OR AS OTHERWISE INDICATED ON DRAWING.

ALUMINUM CASTINGS, PERMANENT OR SAND MOLD FOR CLAMPS, AND SHOE BASE, TRADE DESIGNATION 356-T6.

B. FURNISH WITH EACH POLE: (EXCEPT FOR SCHEDULE 3)
(4) 1" DIA. X 3*" LONG HEX HEAD BOLTS, ASTM A-193, GRADE B8, 8 THREADS PER INCH, CLASS 2 FREE FIT., STAINLESS STEEL
(4) - 2*" O.D. X 1*" I.D. X *" THICK OR 2*" O.D. X 1*" I.D. X *" THICK LARGE HEAVY STEEL FLATWASHERS GALVANIZED PER ASTM B695, CLASS 50.
(4) 1" DIA. PLAIN WASHERS, STAINLESS STEEL
(4) 1" DIA. LOCK WASHERS, STAINLESS STEEL
(4) 1"-8NC-2 HEX NUTS, STAINLESS STEEL
(4) BOLT COVERS ALUMINUM ALLOY 443.0 OR 360 WITH STAINLESS STEEL SCREWS.

C. ALUMINUM LIGHTING STANDARD SHALL BE DESIGNED TO ADEQUATLY SUPPORT A LUMINAIRE OF THE WEIGHT AND PROJECTED AREA AS CALLED FOR IN SCHEDULE 1 OR 2 ON THIS SHEET.

D. UNTAPERED 8" DIA. SECTION ON THE 37' SHAFT WILL BE PERMITTED, BUT UNTAPERED SECTION SHALL NOT EXCEED 25' MAXIMUM FROM BASE OF THE SHAFT.

E. A REINFORCED FLUSH HANDHOLE IS REQUIRED ON ALL S.B. LIGHTING STANDARDS AND SHALL BE LOCATED TWO FEET FROM BASE OF SHAFT. WHEN LOCATED BEHIND CHAIN LINK FENCE, THE HAND HOLE SHALL BE LOCATED ONE FOOT ABOVE THE FENCE. A FIBERGLASS HANDHOLE COVER SHALL BE USED. IT MUST BE MODIFIED FOR UV RESISTANCE. GROUND STUD (SEE L-01) SHALL BE INSTALLED OPPOSITE HAND HOLE.

F. DESIGN AND MANUFACTURE ACCORDING TO THE 2001 AASHTO SPECIFICATIONS FOR STRUCTURAL SUPPORTS FOR HIGHWAY SIGNS, LUMINAIRES AND TRAFFIC SIGNALS. UTILIZE APPENDIX C OF THE SPECIFICATIONS FOR IDENTIFICATION OF LOADING CRITERIA. DESIGN WIND SPEED IS 80 MPH. FOR FATIGUE IS WAVED.

G. DO NOT INSTALL STANDARD WITHOUT ARM.

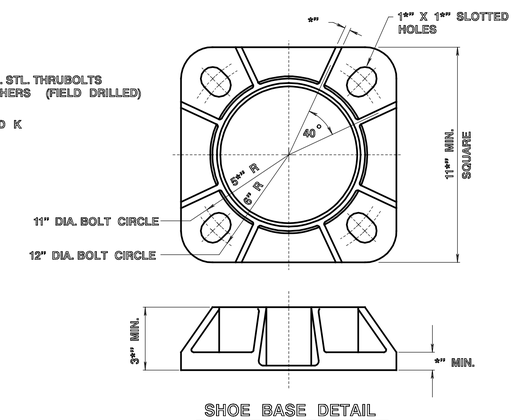

SHOE BASE DETAIL

SCHEDULE 1

N.J. STANDARD			MAX. LUMINAIRE SIZE	
SHAFT DIMENSIONS				
TAPER	MIN. WALL THICKNESS	LENGTH	WEIGHT	PROJ. AREA SQ. FT.
8 X 6	.250"	37'	100*	3.8
8 X 6	.250"	37'	100*	3.8
8 X 6	.188"	22'	60*	3.0
8 X 6	.188"	22'	60*	3.0

SCHEDULE 2

N.J. STANDARD			MAX. LUMINAIRE SIZE	
SHAFT DIMENSIONS				
TAPER	MIN. WALL THICKNESS	LENGTH	WEIGHT	PROJ. AREA SQ. FT.
8 X 6	.250"	42'	100*	3.8

SCHEDULE 3

N.J. STANDARD			MAX. LUMINAIRE SIZE	
SHAFT DIMENSIONS				
TAPER	MIN. WALL THICKNESS	LENGTH	WEIGHT	PROJ. AREA SQ. FT.
9 X 6	.188"	6'-6"	60*	3.0
9 X 6	.188"	6'-6"	60*	3.0

NEW JERSEY DEPARTMENT OF TRANSPORTATION

ELECTRICAL DETAILS

N.T.S.

LIGHTING STANDARD ALUMINUM

L-1807

REFERENCE

BDC07D-03