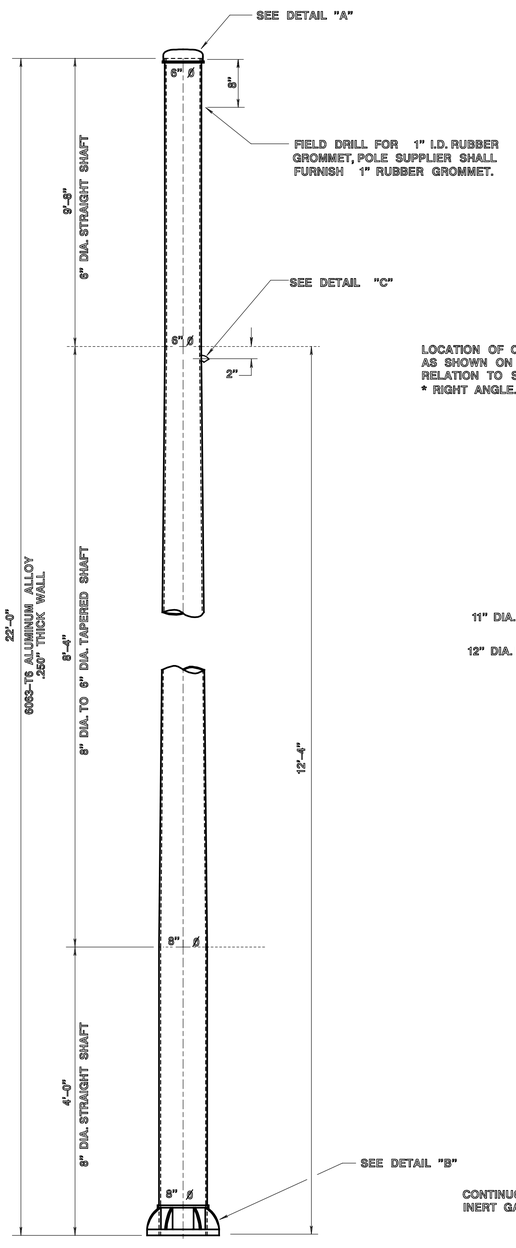

TRAFFIC SIGNAL STANDARD 'C'

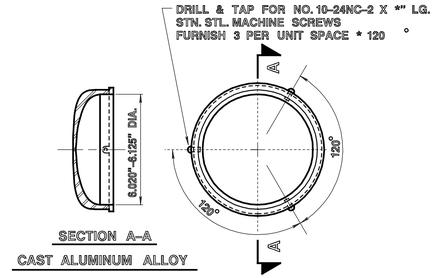

SECTION A–A

CAST ALUMINUM ALLOY

DETAIL "A"

CAST ALUMINUM CAP

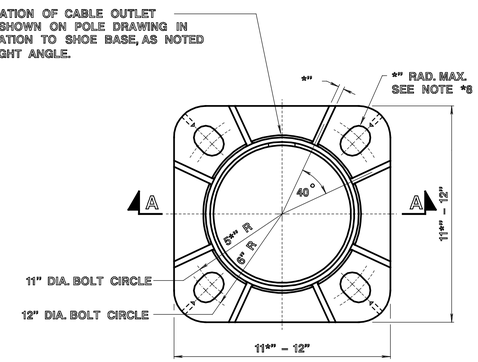

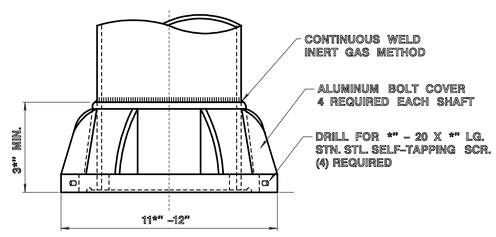

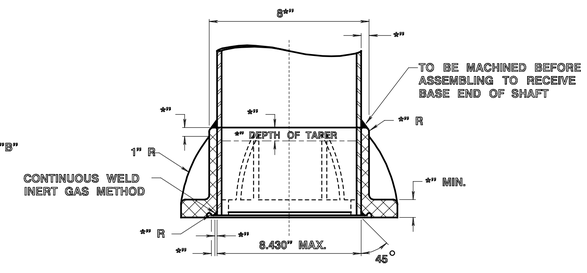

SECTION A–A

DETAIL "B"

ALUMINUM SHOE BASE

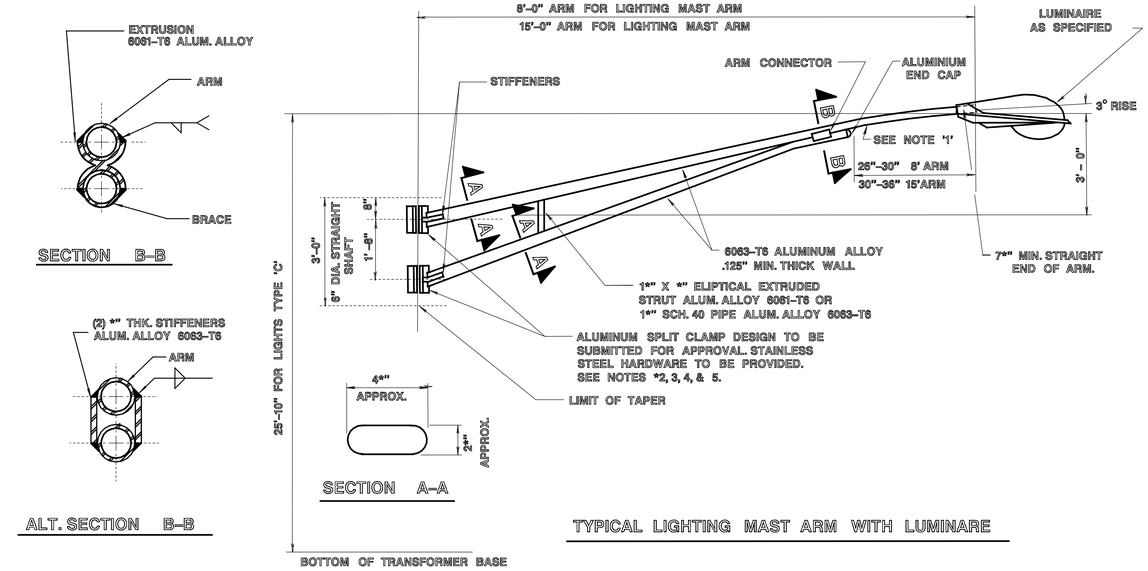

TYPICAL LIGHTING MAST ARM WITH LUMINARE

FURNISH WITH EACH STANDARD

4 – 1" DIA. X 3 *" LONG HEX HEAD BOLTS, 8 THREADS PER INCH CLASS 2, FREE FIT. STAINLESS STEEL. ASTM A–193 GRADE B8.
8 – 1" DIA. PLAIN WASHERS, STAINLESS STEEL, (4) 2" O.D., (4) 2 *" O.D.
4 – 1" DIA. LOCK WASHERS, STAINLESS STEEL.
4 – 1" DIA. HEX NUTS, STAINLESS STEEL.
4 – BOLT COVERS ALUMINUM ALLOY 43 WITH STAINLESS STEEL SCREWS.
1 – CAP.

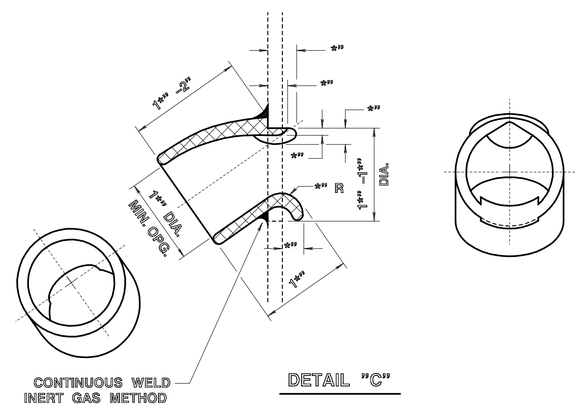

DETAIL "C"

CABLE OUTLET

CAST ALUMINUM ALLOY

GENERAL NOTES

1. ALTERNATE ARRANGEMENT OF TAPERED ELLIPTICAL TRUSS TYPE BRACKET ARM MEMBERS PERMISSIBLE SUBJECT TO APPROVAL. WIRE WILL ENTER UPPER MEMBER 8" FROM TOP OF STANDARD. PROVIDE ALUMINUM SPLIT CLAMPS.
2. FURNISH CERTIFICATIONS THAT ALUMINUM ALLOY AND TEMPER MEET REQUIREMENTS AS SET FORTH BELOW OR AS OTHERWISE INDICATED ON DRAWING.
3. ALUMINUM CASTINGS, PERMANENT OR SAND MOLD FOR CLAMPS, SHOE BASE AND TRANSFORMER BASE TRADE DESIGNATION 356–T6.
4. ALUMINUM EXTRUSION FOR CLAMPS OR MAST ARM STRUT:
   CURRENT ASTM SPECIFICATION
   B221 ALLOY 6061–T6, 6005–T5 OR 6063–T6.
5. HARDWARE SUPPLIED: (8) *"– 13NC HARDWARE ASTM A193, GRADE B–8 STAINLESS STEEL COMPLETE WITH (8) STAINLESS STEEL HEX NUTS, (16) STAINLESS STEEL FLAT WASHERS AND (8) STAINLESS STEEL LOCK WASHERS.
6. DESIGN AND MANUFACTURE ACCORDING TO THE 2001 AASHTO STANDARD SPECIFICATIONS FOR STRUCTURAL SUPPORTS FOR HIGHWAY SIGNS, LUMINAIRES AND TRAFFIC SIGNALS. UTILIZE APPENDIX C OF THE SPECIFICATIONS FOR IDENTIFICATION OF LOADING CRITERIA. DESIGN WIND SPEED IS 80 MPH. DESIGN FOR FATIGUE IS WAVED.
7. ALL TOLERANCES IN CASTINGS SHALL BE * *".
8. HOLE IS SUFFICIENT DIAMETER TO ACCEPT 1" DIAMETER BOLT.
9. DO NOT INSTALL STANDARD WITHOUT ARM

NEW JERSEY DEPARTMENT OF TRANSPORTATION

ELECTRICAL DETAILS

N.T.S.

TRAFFIC SIGNAL STANDARD "C"

T–0807

REFERENCE

BDC07D-03