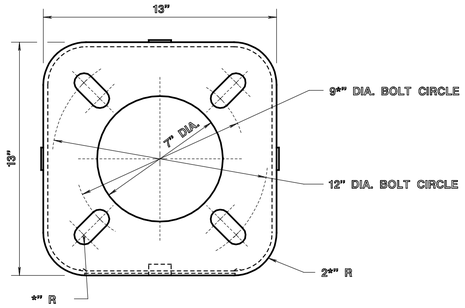

TOP VIEW

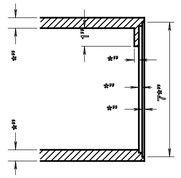

SECTION A–A

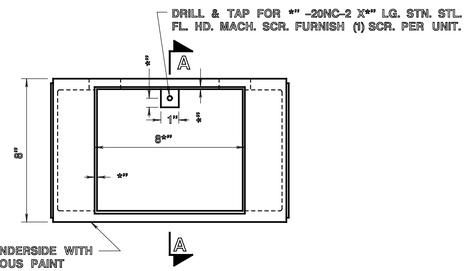

FRONT VIEW DOOR SIDE

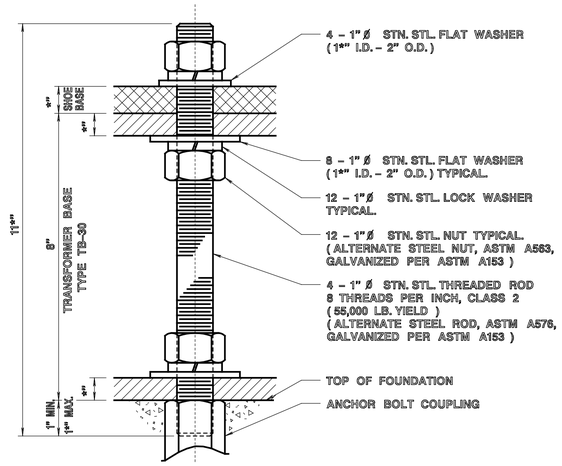

THROUGH BOLT DETAIL

FOR THROUGH BOLTING

ALUMINUM ALLOY CASTING
356–T6–PERMANENT MOLD
OR SAND CASTING

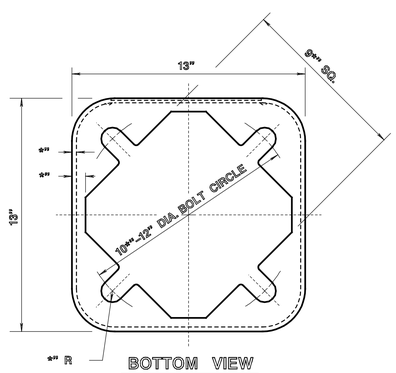

BOTTOM VIEW

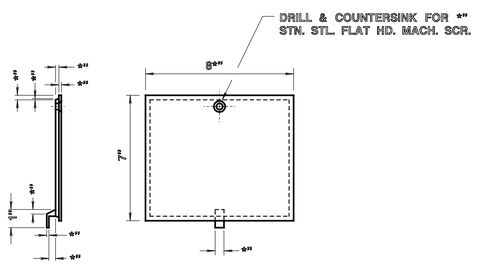

END VIEW

DOOR

ALUMINUM TRANSFORMER BASE

PART NO. NJTB – 30

REFERENCE

BDC07D-03

NEW JERSEY DEPARTMENT OF TRANSPORTATION

ELECTRICAL DETAILS

N.T.S.

ALUMINUM TRANSFORMER BASE DETAILS

PART No. NJTB – 30

L–1507