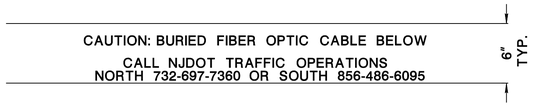

WARNING TAPE

(BLACK LETTERS ON ORANGE BACKGROUND)

NOTE:

1. PROVIDE WARNING TAPE TO BE ORANGE, 4 MIL. FLEXIBLE POLYETHYLENE FILM AND IS RESISTANT TO ACIDS, BASES, HYDROCARBONS AND WATER.

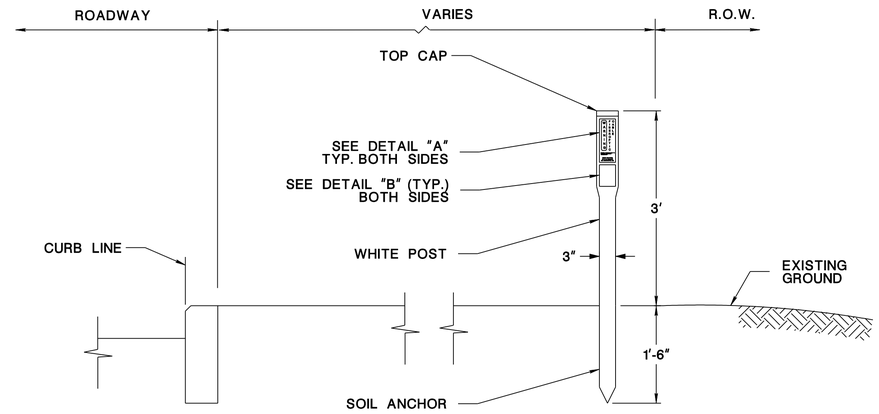

FIBER OPTIC CABLE MARKER
SPACE MARKERS 500' APART

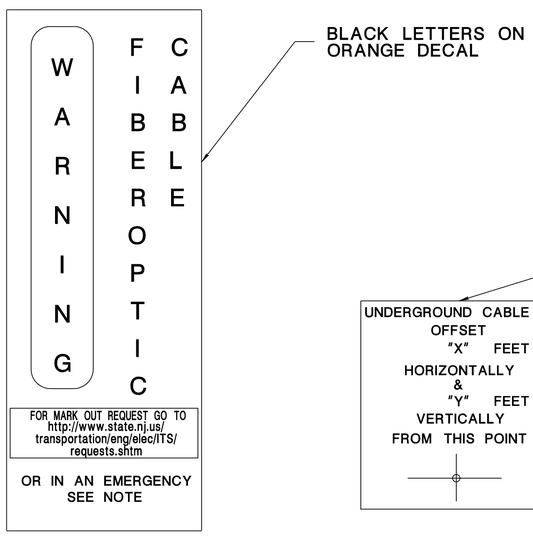

DETAIL "A"
3"x9" WARNING DECAL

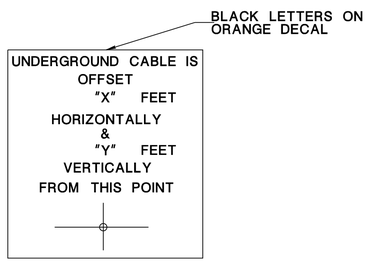

DETAIL "B"

3"x4" WARNING DECAL

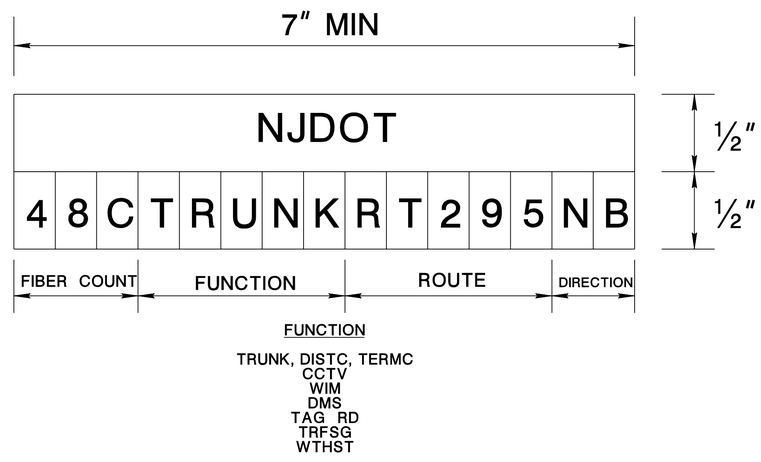

FIBER OPTIC CABLE TAG

NOTE: Contact MSE for appropriate telephone number to be listed here.

FIBER OPTIC WARNING TAPE, MARKER AND TAG

NOT TO SCALE

ITS-704-06

NEW JERSEY DEPARTMENT OF TRANSPORTATION

ITS DETAILS

FIBER OPTIC WARNING TAPE, MARKER AND TAG

*
*

NJDOT Design Services

BDC****	CHANGED NORTH PHONE #, WEB SITE & ADDED NOTE
BDC-11D-03	MISC. CHANGES
BDC07D-03	- ORIGINAL SHEET

pen table=.
scale=.
date=.
ID=.
file=.