STATE OF NEW JERSEY
DEPARTMENT OF ENVIRONMENTAL PROTECTION
DIVISION OF LAND USE REGULATION
P.O. Box 439, Trenton, New Jersey 08625-0439
Fax: (609) 777-3656 or (609) 292-8115
www.state.nj.us/dep/landuse

PERMIT

In accordance with the laws and regulations of the State of New Jersey, the Department of Environmental Protection hereby grants this permit to perform the activities described below. This permit is revocable with due cause and is subject to the limitations, terms and conditions listed below and on the attached pages. For the purpose of this document, "permit" means "approval, certification, registration, authorization, waiver, etc." Violation of any term, condition or limitation of this permit is a violation of the implementing rules and may subject the permittee to enforcement action.

Approval Date

Expiration Date

Permit Number(s)	Type of Approval(s)	Enabling Statute(s)
1505-07-0044.1 (FHA 070001) 1505-07-0044.1 (FWW 070001) 1505-07-0044.1 (FWW 070002)	Major Stream Encroachment Freshwater Wetlands General Permit #2 Freshwater Wetlands General Permit #10B	N.J.S.A. 13:9B et seq. N.J.S.A. 58:16A-50 et seq. N.J.S.A. 58:10A et seq.

Applicant

Mr. George Kuhn
NJDOT
PO Box 600
Trenton, NJ 08625

Site Location

Block & Lot: Rt. 9 Right of Way

Municipality: Berkeley Township

County: Ocean

Description of Authorized Activities and Limit of Disturbance

This permit grants permission to:

Replace bridge 1502-159 over Potters Creek and create an in-stream crossing for an existing 12 inch water main in the Rt. 9 Right of Way within Berkeley Township, Ocean County, New Jersey.

Prepared by

Joseph E. Marut III

Received or Recorded by County Clerk

THIS PERMIT IS NOT EFFECTIVE AND NO CONSTRUCTION APPROVED BY THIS PERMIT, OR OTHER REGULATED ACTIVITY, MAY BE UNDERTAKEN UNTIL THE APPLICANT HAS SATISFIED ALL PRE-CONSTRUCTION CONDITIONS AS SET FORTH IN THIS PERMIT.

This permit is not valid unless authorizing signature appears on the last page.

STANDARD CONDITIONS:

1. **Extent of approval:**

   a. This document grants permission to perform certain activities that are regulated by the State of New Jersey. The approved work is described by the text of this permit and is further detailed by the approved drawings listed herein. All work must conform to the requirements, conditions and limitations of this permit and all approved drawings.

   b. If you alter the project without prior approval, or expand work beyond the description of this permit, you may be in violation of State law and may be subject to fines and penalties. Approved work may be altered only with the prior written approval of the Department.

   c. You must keep a copy of this permit and all approved drawings readily available for inspection at the work site.

2. **Acceptance of permit:** If you begin any activity approved by this permit, you thereby accept this document in its entirety, and the responsibility to comply with the terms and conditions. If you do not accept or agree with this document in its entirety, **do not begin** construction. You are entitled to request an appeal within a limited time as detailed on the attached *Administrative Hearing Request Checklist and Tracking Form.*

3. **Recording with County Clerk:** You must record this permit in the Office of the County Clerk for each county involved in this project. You must also mail or fax a copy of the front page of this permit to the Department showing the received stamp from each County Clerk within 30 days of the issuance date

4. **Notice of Construction:** You must notify the Department in writing at least 7 days before you begin any work approved by this permit by submitting the attached construction report. The Construction Reports are also available at www.nj.gov/dep/landuse/.

5. **Expiration date:** All activities authorized by this permit must be completed by the expiration date shown on the first page unless otherwise extended by the Division. At that time, this permit will automatically become invalid and none of the approved work may begin or continue until a replacement permit is granted. (Some permits may qualify for an extension of the expiration date. Please contact the Department for further information.)

6. **Rights of the State:**

   a. This permit is revocable and subject to modification by the State with due cause.

   b. Representatives from the State have the statutory authority to enter and inspect this site to confirm compliance with this permit and may suspend construction or initiate enforcement action if work does not comply with this permit.

   c. This permit does not grant property rights. The issuance of this permit shall not affect any action by the State on future applications, nor affect the title or ownership of property, nor make the State a party in any suit or question of ownership.

7. **Other responsibilities:** You must obtain all necessary local, Federal and other State approvals before you begin work. All work must be stabilized in accordance with the

Standards for Soil Erosion and Sediment Control in New Jersey, and all fill material must be free of toxic pollutants in toxic amounts as defined in section 307 of the Federal Act.

SPECIAL CONDITIONS IN ADDITION TO THE STANDARD CONDITIONS:

8. The permittee shall immediately inform the Department of any unanticipated adverse effects on the environment not described in the application or in the conditions of this permit.

9. Any regulated activities undertaken on the site before a copy of this recorded restriction is submitted to the Department will be considered in violation of the implementing rules and this permit.

10. The issuance of this permit does not waive or affect in any way the right of the State of New Jersey to seek and collect monetary penalties or to take other enforcement action pursuant to any applicable State regulations.

11. Prior to any regulated work, the applicant must obtain all necessary local, Federal and other State approvals that may be required. Specifically, approvals from the following agencies may be necessary prior to construction: **Ocean County Soil Conservation District**.

12. Upon completion of the project, all temporarily disturbed upland areas within or affecting the regulated flood plain must be restored to their original condition using native soils and indigenous vegetation. Said restoration is to be accomplished under the recommendation and discretion of the local soil conservation district having jurisdiction over the project.

13. The time limit for backfilling and stabilizing all earth work and for the removal of all temporary fill and other appurtenances in connection with the placement of storm water outfall structures, pipelines and other utility crossings shall be thirty (30) days after the commencement of construction for each individual stream crossing and/or section of the project along any stream channel. However, if the construction is located within an acid producing area, the backfilling must be completed without exposing any acid producing deposits for more than eight (8) hours.

14. Trees, shrubs, grasses, and other vegetation within 25 feet from the top of all stream banks on site shall not be disturbed for any reason, except as approved by the Department and as shown on the approved site plans. This condition applies to all streams and waterways on site, regardless of the contributory drainage area.

15. All excavated material and dredged spoils must be disposed of in a lawful manner outside of any regulated flood plain, open water, freshwater wetlands or adjacent transition areas, and in such a way as to not interfere with the positive drainage of the receiving area.

16. During construction, all excavation must be adequately monitored for the presence of acid producing deposits. If any such deposits are encountered, the mitigation and disposal standards outlined in Section 2.5 of the "Stream Encroachment Technical Manual" must be implemented.

17. This permit authorizes the disturbance of 0.208 acres of freshwater wetlands, state open waters, and transition areas under a Freshwater Wetlands General Permit No. 10B for the reconstruction of the bridge and the construction of the bypass, and the disturbance of 0.004 acres of freshwater wetlands, state open waters, and transition area for the relocation of the water main pipeline under a Freshwater Wetlands General Permit #2.

The authorization of activities under the Freshwater Wetlands General Permit #2 and 10B include a transition area waiver which allows encroachment only in the that portion of the transition area which has been determined by the Department to be necessary to accomplish the authorized activities. In addition, this permit to conduct a regulated activity in a wetland area or open water includes the **Department's approval of a Water Quality Certificate for these activities.**

The General Permit activities are shown on plans on sheet 2 of 14 entitled, NEW JERSEY DEPARTMENT OF TRANSPORTATION, CONSTRUCTION PLAN, ROUTE 9 BRIDGE OVER BRANCH OF POTTERS CREEK, CONTRACT NO. 086073260, dated May 23, 2007, unrevised and prepared by Dewberry-Goodkind, Inc.

18. In order to protect the aquatic life within the stream, any proposed grading or construction activities within the banks of this or any other stream on site are prohibited between May 1 and June 30 of each year. In addition, any activity within the 100-year flood plain or flood hazard area of this watercourse, which could introduce sediment into said stream or which could cause an increase in the natural level of turbidity is also prohibited during this period. The Department reserves the right to suspend all regulated activities on site should it be determined that the applicant has not taken proper precautions to ensure continuous compliance with this condition.

19. Any and all precautions must be taken to prevent raw concrete from coming in contact with the waters of the Branch of Potters Creek.

20. Turbidity barrier is to be placed around all work areas and must remain in place until all construction work is completed.

21. The permittee shall monitor for suspended sediments in nearby stream areas on a daily basis when any construction is taking place in the channel. Id sediment discharge from the immediate work area is detected, then the project must cease until more appropriate preventative measures are put in place. The NJDEP reserves the right to suspend all work activities if turbidity levels of the stream are increased because of the regulated activities.

22. The drawings hereby approved are four (4) sheets prepared by Dewberry-Goodkind, Inc., dated May 23, 2007, unrevised, unless noted and entitled:

New Jersey Department of Transportation, Route 9 Bridge Over Branch of Potters Creek, Contract No. 086073260.

"Construction Plan," Sheet 2 of 14;

"Construction Details," Sheet 2A of 14, dated 9/10/07;

"Typical Sections," Sheet 3 of 14; and

"Profiles," Sheet 4 of 14.

Christopher Dolphin, Manager
Bureau of Coastal Regulation

9/14/07
Date

Adjudicatory Hearing Request Checklist and Tracking Form

PROJECT MANAGEMENT
SEP 19 2007

I. Permit Decision or Other Department Decision Being Appealed:

_____

_____

Issuance Date of Decision Document Document Number (If any)

II. Please provide Name, Address and Phone No. of:

_____ _____

Person Requesting Hearing Name of Attorney (If applicable)

_____ _____

Address Address

_____ _____

Phone No. Phone No.

III. If you are the applicant or permittee, please include the following information with your hearing request:

A. The date you received the permit decision or other decision which you are appealing:
B. A copy of the decision document;
C. The findings of fact and conclusions of law you are appealing;
D. A statement as to whether or not you raised each legal and factual issue during the permit application process;
E. Suggested revised or alternative permit conditions;
F. An estimate of the time required for the hearing;
G. A request, if necessary, for a barrier-free hearing location for physically disabled persons;
H. A clear indication of any willingness to negotiate a settlement with the Department prior to the Department's processing of our hearing request to the Office of Admini8strative Law; and
I. This form completed; signed and dated with all of the information listed above, including attachment to:

1. New Jersey Department of Environmental Protection Office of Legal Affairs
   Attention: Adjudicatory Hearing Requests
   401 East State Street
   P.O. Box 402
   Trenton, NJ 08625-0402:

With a copy to:

2. New Jersey Department of Environmental Protection
   Land Use Regulation Program
   Attention: Director
   P.O. Box 439
   Trenton, NJ 08625-0439

Signature: _____ Date: _____

IV. **If you are a person other than the applicant or permittee, please include the following information with your hearing request:**

A. The date you or your agent received notice of the permit decision, and a copy of the permit decision:
B. Evidence that a copy of your hearing request has been delivered to the applicant for the permit decision which is the subject of your hearing request (e.g., certified mail return receipt);
C. A detailed statement of which findings of fact and/or conclusion of law you are challenging;
D. A description of our participation in any public hearings held in connection with the permit application and copies of any written comments you submitted;
E. Whether you claim a statutory or constitutional right to a hearing, and, if you claim such a right, a reference to the applicable statue or an explanation of how your interests are affected by the permit decision;
F. Suggested revised or alternative permit conditions;
G. An estimate of the time required for the hearing;
H. A request, if necessary, for a barrier-free hearing location for physically disabled persons;
I. A clear-indication of any willingness to negotiate a settlement with the Department prior to the Department's processing of the hearing request to the Office of Administrative Law; and
J. This form completed, signed and dated with all the information listed above, including attachments to

1. New Jersey Department of Environmental Protection Office of Legal Affairs
   Attention: Adjudicatory Hearing Requests
   401 East State Street
   P.O. Box 402
   Trenton, NJ 08625-0402:

With a copy to:

2. New Jersey Department of Environmental Protection
   Land Use Regulation Program
   Attention: Director
   P.O. Box 439
   Trenton, NJ 08625-0439

Signature: _____ Date: _____

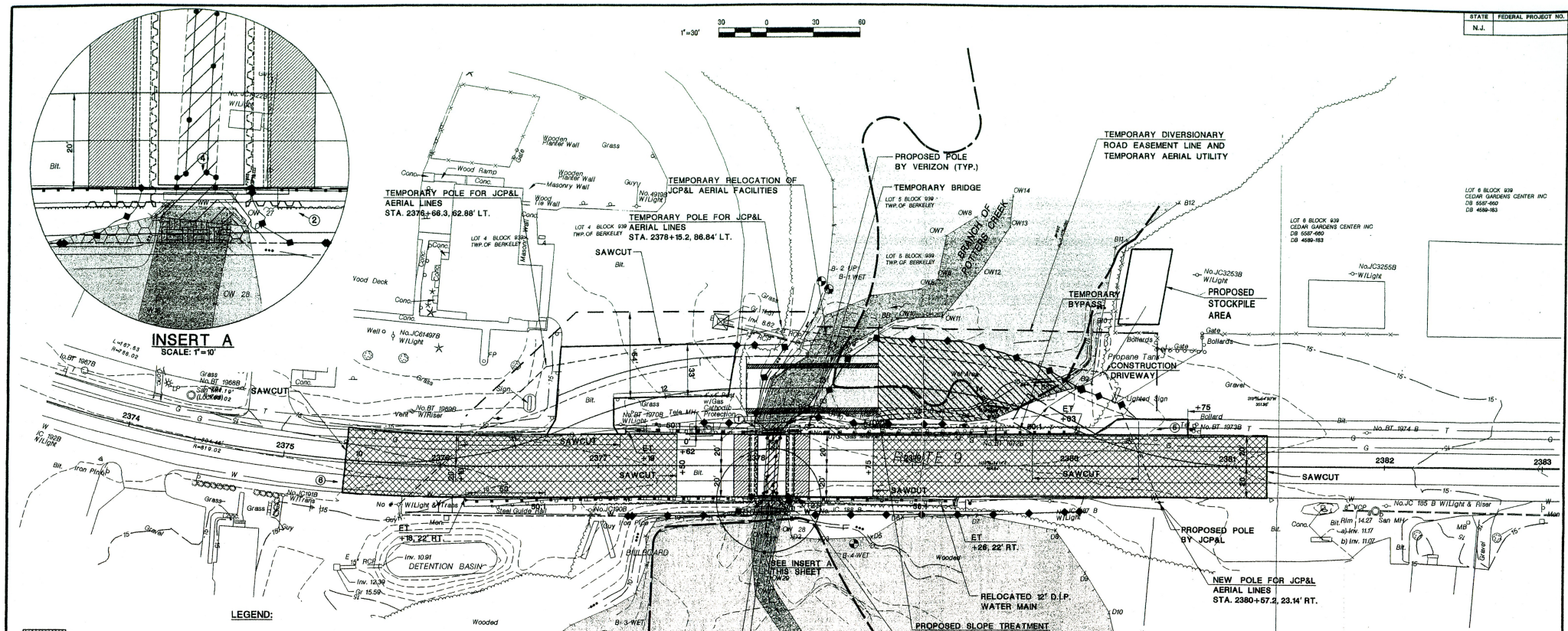

STATE	FEDERAL PROJECT NO.
N.J.	

LEGEND:

- PROPOSED BRIDGE APPROACH SLAB
- GP-2 STATE OPEN WATER IMPACT
- GP-2 FRESHWATER WETLAND IMPACT
- GP-10B STATE OPEN WATER IMPACT
- GP-10B FRESHWATER WETLAND IMPACT
- STATE OPEN WATERS
- FRESHWATER WETLANDS
- TBR — TO BE REMOVED
- (2) PHOTO NUMBER, LOCATION AND DIRECTION
- BRGS. — BEARINGS
- MILLING/RESURFACING
- FLOW DIRECTION
- HEAVY DUTY SILT FENCE-ORANGE
- LIMIT OF DISTURBANCE
- BEAM GUIDE RAIL
- INLET FILTER
- EXISTING 100 YR. FLOODPLAIN LIMIT=ELEV. 10.32'
  PROPOSED 100 YR. FLOODPLAIN LIMIT=ELEV. 10.31'
- EXISTING CONTOURS
- PROPOSED SHEETING TO BE LEFT IN PLACE
- FLOATING TURBIDITY BARRIER
- W — PROPOSED WATER MAIN
- PROPERTY LINE
- SUITABLE BOG TURTLE HABITAT LIMITS
- OW10 — FREASHWATER WETLAND/STATE OPEN WATERS DELINEATION AND POINT
- B-1 WET — WETLAND/UPLAND SOIL BORING
- E — TEMPORARY RELOCATION OF ELECTRIC LINES

PERMIT IMPACTS		
TYPE OF IMPACT	IMPACT AREA (ACRES)	
	GP-2	GP-10B
STATE OPEN WATERS*	.002	.012
FRESHWATER WETLANDS*	.002	.111
PERMANENT TRANSITION AREA	0	0.002
TOTAL	.004	.125

*NOTE: IMPACTS ARE TEMPORARY

NOTES:

1. THE TEMPORARY BRIDGE WILL BE REMOVED AND THE DISTURBED AREA RESTORED TO ITS ORIGINAL STATE. THE TOTAL TIME OF DISTURBANCE WILL BE LESS THAN 6 MONTHS.
2. TRANSITION AREA DISTURBANCE WILL BE LIMITED TO THAT REQUIRED FOR ACCESS TO THE CONSTRUCTION ZONE.

APPROVED
1505-07-0044.1
Str. Encr. Applic. No.
State of New Jersey, Dept. Environmental Protection

C-1 / C-1

NEW JERSEY DEPARTMENT OF TRANSPORTATION

CONSTRUCTION PLAN

ROUTE 9 BRIDGE
OVER BRANCH OF POTTERS CREEK
CONTRACT NO. 086073260

DEWBERRY-GOODKIND, INC.
COA NO. 24GA28047600
5/23/07
MICHAEL P. SEARS P.E.
NEW JERSEY PROFESSIONAL ENGINEER, LICENSE NO. 42073

2 / 14

jcrespo 5/21/2007 8:26:46 AM HP1050-E.plt 30-Scale 3588-01-Rt-9-OVer-Potters-Creek Q:\3588\01\CAD\Civil\Plans\Permits\Stream Encroachment\CP358801.dgn

STATE	FEDERAL PROJECT NO.
N.J.	

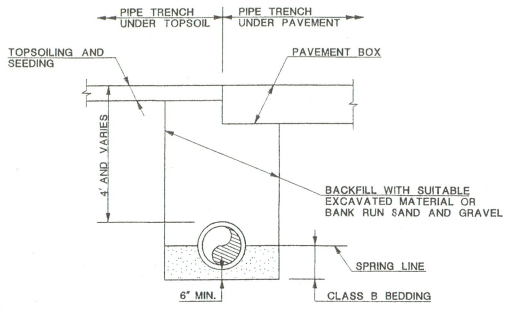

NOTE :

1. SEPARATE PAYMENT WILL NOT BE MADE FOR BEDDING AND BACKFILL.
2. FOR INSTALLATION WITHIN LIMITS OF FRESHWATER WETLANDS AND/OR STATE OPEN WATERS, BACKFILL THE UPPERMOST 18 INCHES OF EXCAVATION WITH ORIGINAL TOPSOIL MATERIAL.

WATER MAIN TRENCH DETAIL

NOT TO SCALE

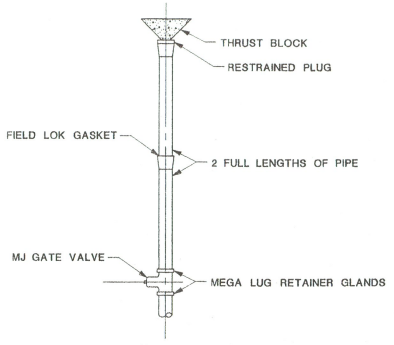

STUB FOR FUTURE CONNECTION

NOT TO SCALE

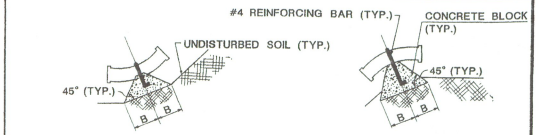

VERTICAL FITTINGS

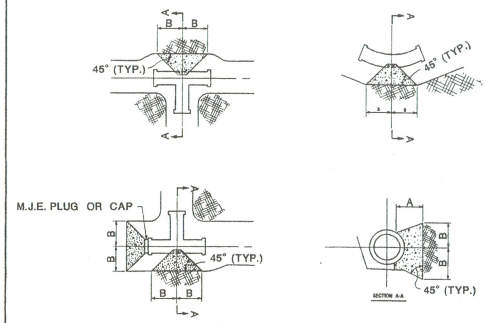

HORIZONTAL FITTINGS

PIPE DIA.	FITTING	A	B
6"	90° BENDS & TEE's	18"	14"
	11-1/4° - 45°	16"	12"
8"	90° BENDS & TEE's	16"	18"
	11-1/4° - 45°	16"	16"
10"	90° BENDS & TEE's	24"	24"
	11-1/4° - 45°	18"	18"
12"	90° BENDS & TEE's	24"	28"
	11-1/4° - 45°	20"	20"
16"	90° BENDS & TEE's	24"	36"
	11-1/4° - 45°	24"	28"

NOTES:

1. ALL THRUST BLOCKS TO BE POURED AGAINST UNDISTURBED SOIL.
2. CONCRETE THRUST BLOCKS TO BE N.J.D.O.T. CLASS C.

CONCRETE THRUST BLOCK DETAILS

NOT TO SCALE

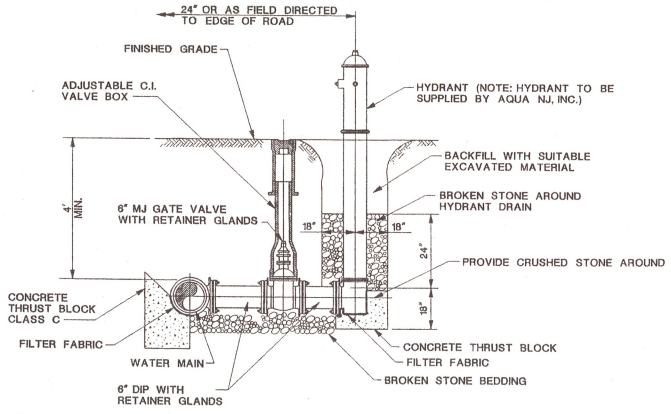

NOTE :

1. FIRE HYDRANT ASSEMBLIES SHALL INCLUDE ALL PIPING, VALVES, FITTINGS AND APPLIANCES BETWEEN THE ℄ OF THE WATER MAIN TO THE ℄ OF THE FIRE HYDRANT.
2. NO SEPERATE PAYMENT WILL BE MADE FOR THE INSTALLATION OF FIRE HYDRANT ASSEMBLIES. ALL COSTS TO BE INCLUDED IN THE UNIT PRICE FOR 12" DUCTILE IRON WATER PIPE, CLASS 52.

FIRE HYDRANT ASSEMBLIES

NOT TO SCALE

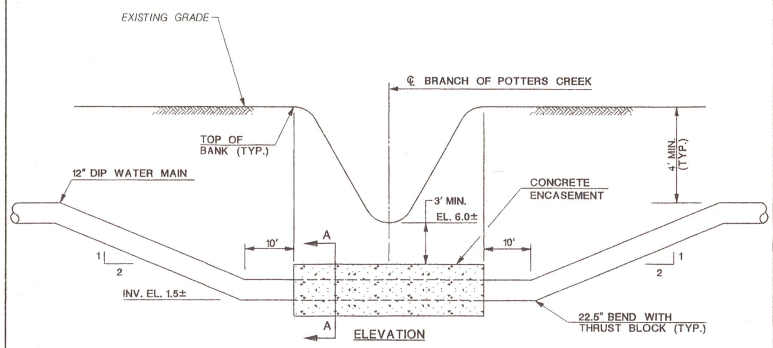

ELEVATION

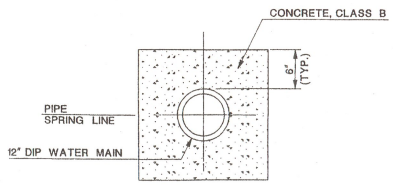

SECTION A-A

WATER MAIN STREAM CROSSING

NOT TO SCALE

APPROVED
1505-07-0044.1
Str. Encr. Applic. No.
Dept. Environmental
State of New Jersey

WATER MAIN DETAILS

CD-1

NEW JERSEY DEPARTMENT OF TRANSPORTATION

CONSTRUCTION DETAILS

ROUTE 9 BRIDGE
OVER BRANCH OF POTTERS CREEK
CONTRACT NO. 086073260

DEWBERRY-GOODKIND, INC.
COA NO. 24GA28047600
Michael P. Sears 9/10/07
MICHAEL P. SEARS P.E.
NEW JERSEY PROFESSIONAL ENGINEER,
LICENSE NO. 42073

2A
14

ebler 9/10/2007 2:05:33 PM HP1050-E.plt 30-Scale 3588-01-Rt-9-OVer-Potters-Creek Q:\3588\01\CAD\Civil\Plans\Permits\Stream Encroachment\CD358802 REV.dgn

STATE	FEDERAL PROJECT NO.
N.J.	

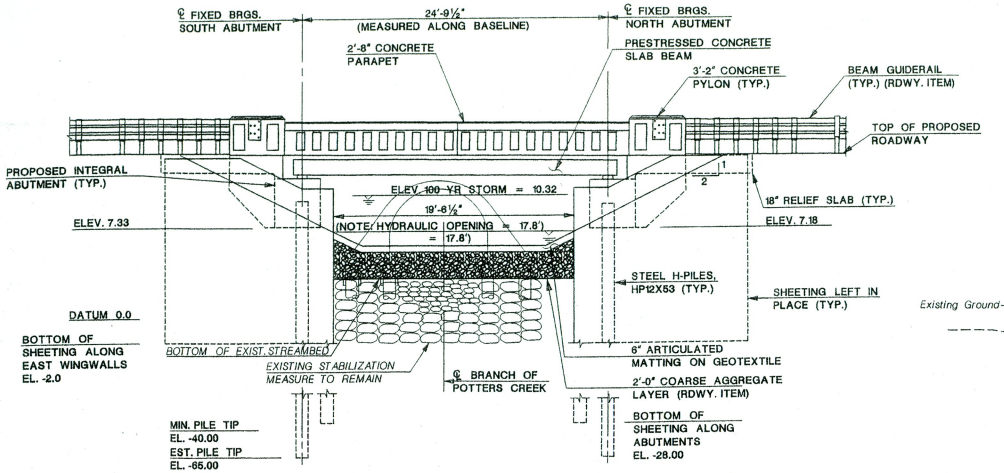

ELEVATION
SCALE: 1"=5'

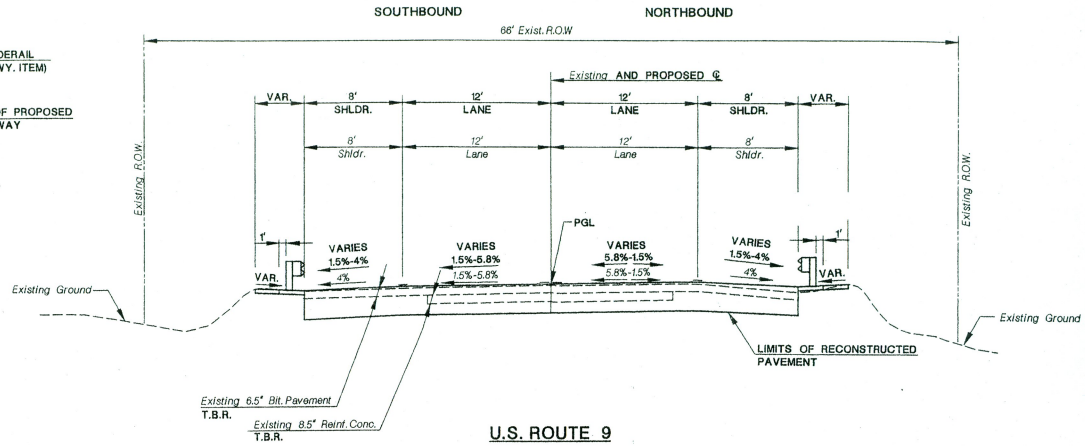

U.S. ROUTE 9
STA. 2377+50 TO STA. 2378+75
SCALE: 1"=5'

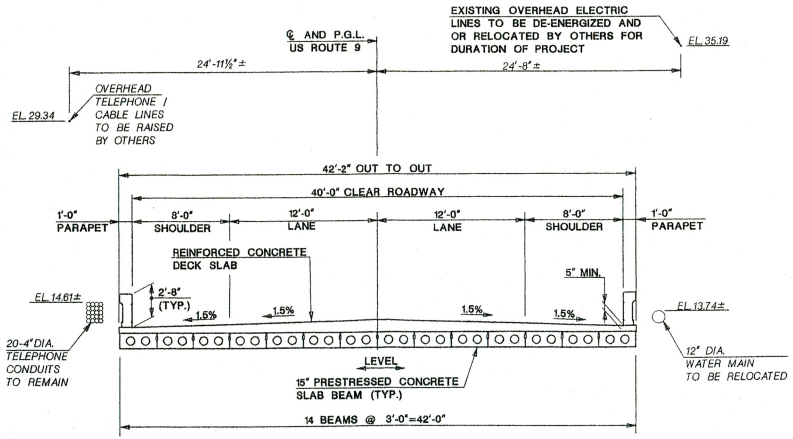

TYPICAL BRIDGE SECTION
SCALE: ¼"=1'-0"

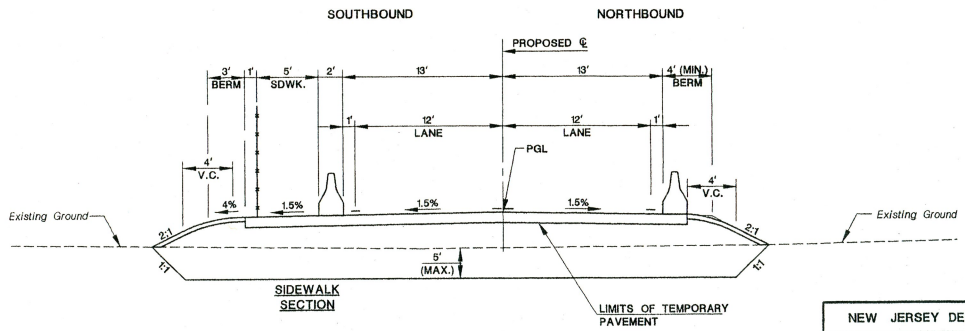

TEMPORARY BYPASS
SCALE: 1"=5'

APPROVED
1505-07-044.1
Str. Encr. Applic. No.
State of New Jersey, Dept. Environmental Protection

TS-1
TS-1

NEW JERSEY DEPARTMENT OF TRANSPORTATION

TYPICAL SECTIONS
ROUTE 9 BRIDGE
OVER BRANCH OF POTTERS CREEK
CONTRACT NO. 086073260

DEWBERRY-GOODKIND, INC.
COA NO. 24GA28047600
MICHAEL P. SEARS P.E.
NEW JERSEY PROFESSIONAL ENGINEER, LICENSE NO. 42073
5/23/07

3
14

Detail Checked by

)creapo 5/21/2007 9:34:18 AM HPI050-E.plt 30-Scale 3588-01-Rt-9-Over-Potters-Creek Q:\3588\01\CAD\Civil\Plans\Permits\Stream Encroachment\CDSE013588.dgn

STATE	FEDERAL PROJECT NO.
N.J.	

1"=30' 30 0 30 60

1"=3' 3 0 3 6

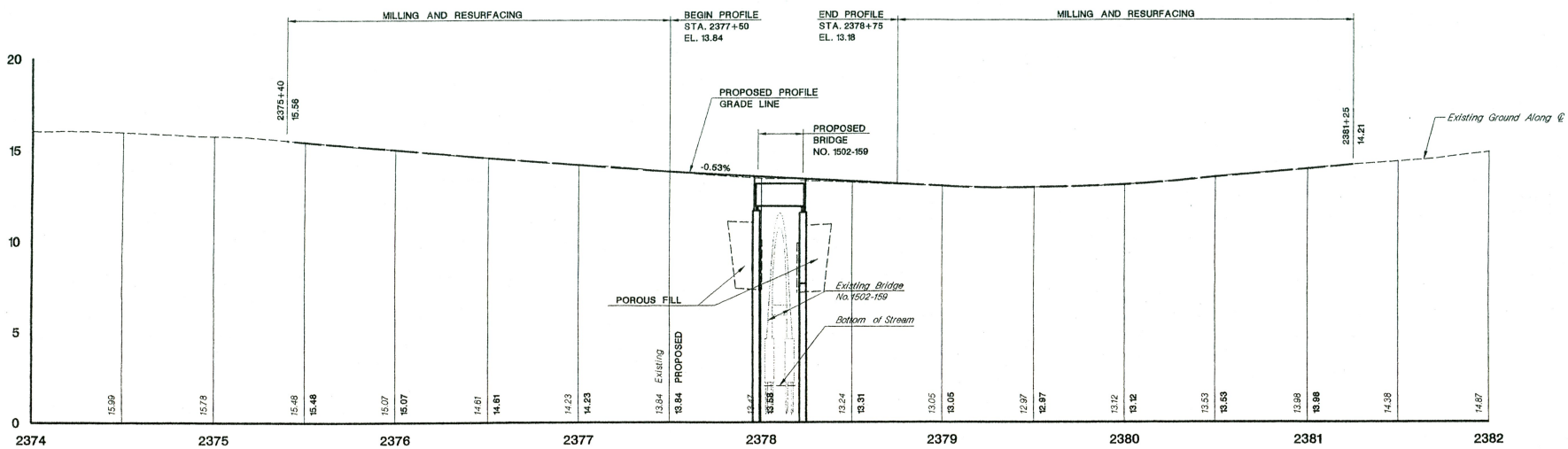

ROUTE 9

DESIGN SPEED = 45 MPH

APPROVED

1505-07-0044.1

Str. Encr. Applic. No.

State of New Jersey, Dept. Environmental Protection

P-1 / P-2

NEW JERSEY DEPARTMENT OF TRANSPORTATION

PROFILES

ROUTE 9 BRIDGE
OVER BRANCH OF POTTERS CREEK
CONTRACT NO. 086073260

DEWBERRY-GOODKIND, INC.
COA NO. 24GA28047600
MICHAEL P. SEARS P.E.
NEW JERSEY PROFESSIONAL ENGINEER,
LICENSE NO. 42073

4
14