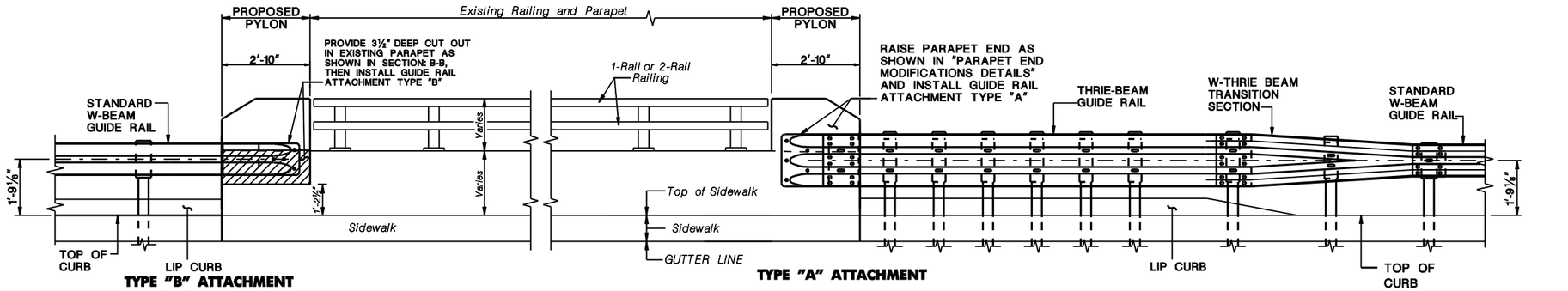

ELEVATION

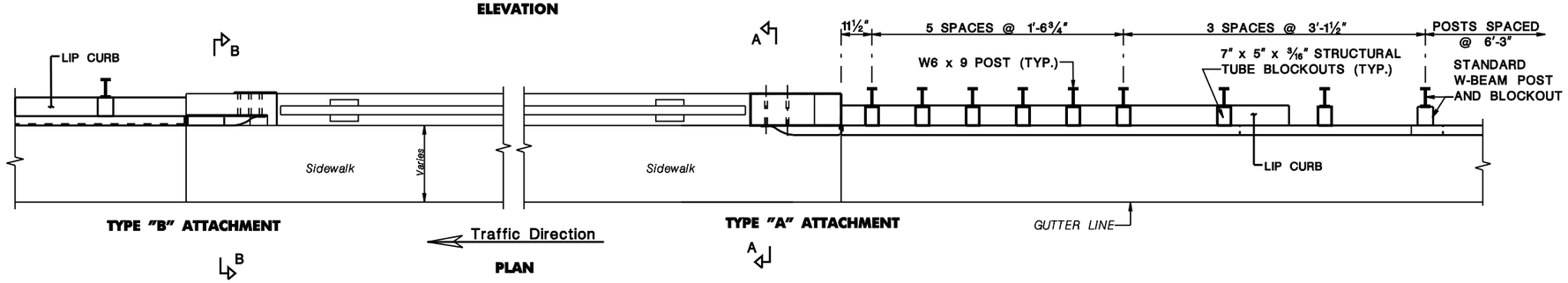

PLAN

PROPOSED GUIDE RAIL ATTACHMENTS AT MODIFIED PARAPET ENDS

NOTES:

1. INCLUDE CORE DRILLING, GROUTING, SAW CUTTING, RAIL CUTTING, NEW REBARS, NEW CONCRETE, DISPOSAL OF OLD CONCRETE,RAIL POST REMOVAL AND ANY OTHER WORK RELATED TO PARAPET MODIFICATIONS IN ITEM, "PARAPET MODIFICATIONS"
2. FOR BRIDGE ATTACHMENT TYPES & ADDITIONAL DETAILS, REFER TO CD-609-16

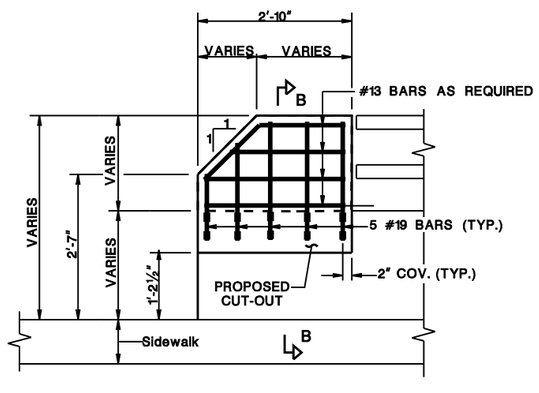

ELEVATION AT TYPE "B" ATTACHMENT

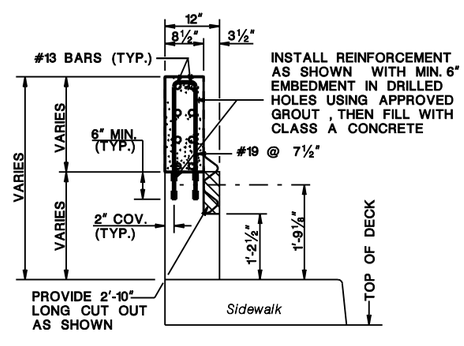

SECTION: B–B

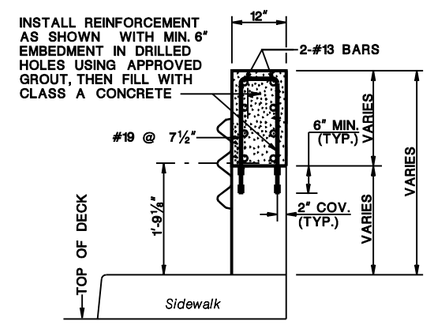

SECTION: A–A

PARAPET END MODIFICATIONS DETAILS

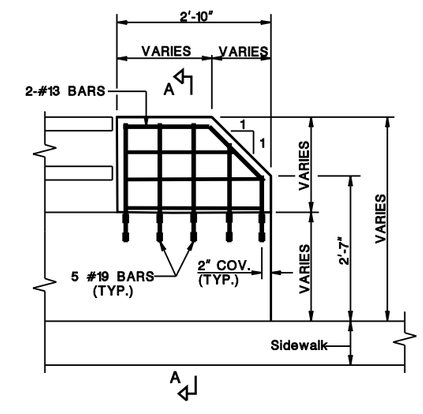

ELEVATION AT TYPE "A" ATTACHMENT

LEGEND

REMOVE

PROPOSED CLASS A CONCRETE

PARAPET AND SIDEWALK WITH ONE OR TWO RAIL RAILING

N.T.S.

BCD-609-5

NEW JERSEY DEPARTMENT OF TRANSPORTATION
BUREAU OF STRUCTURAL ENGINEERING

BRIDGE CONSTRUCTION DETAILS

146E
146

GUIDE RAIL ATTACHMENT WITH SIDEWALK & WITH CURBING ON APPROACH – EXISTING STRUCTURE WITH RAILING

BCD-609-5.1

BCD-609-5-ORIGINAL SHEET

pen table=.
scale=.
date=.
ID=.
file=.