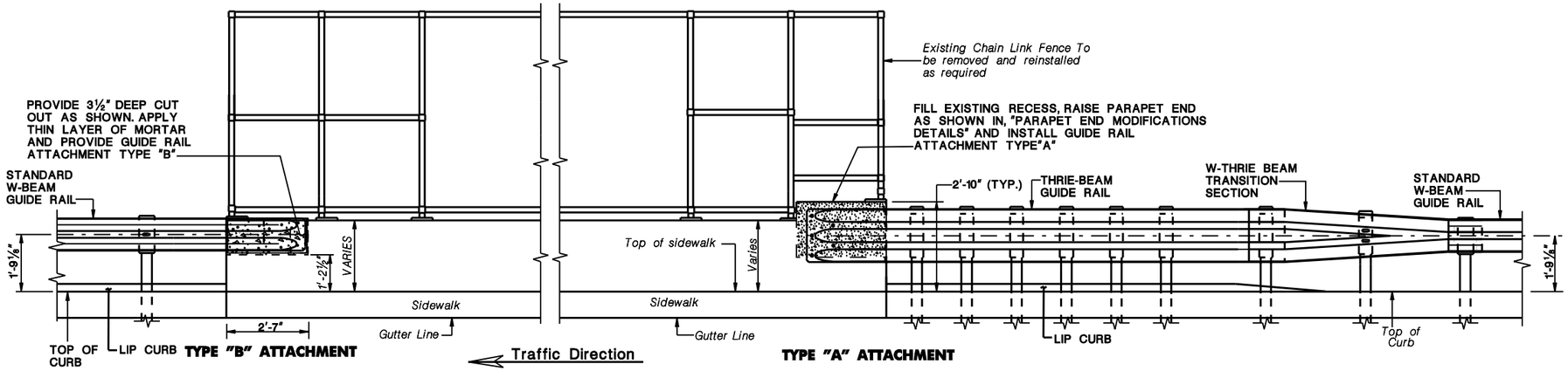

ELEVATION

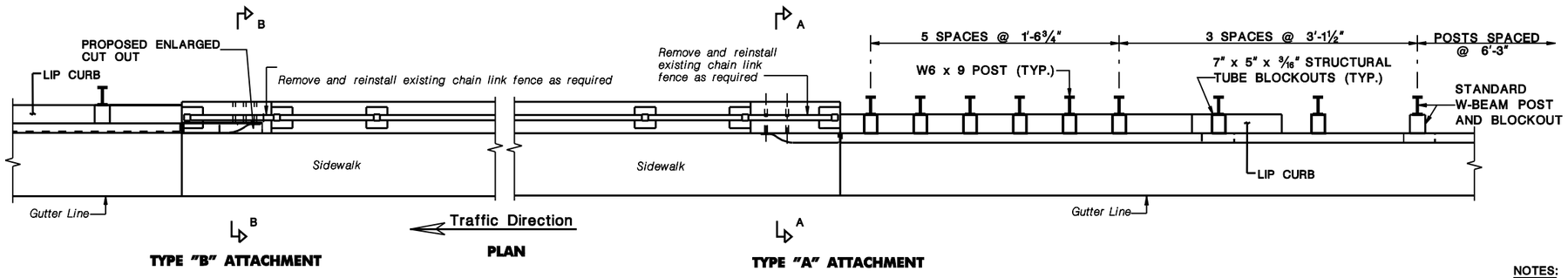

PROPOSED GUIDE RAIL ATTACHMENT

NOTES:

1. INCLUDE COST OF CONCRETE, REINFORCEMENT STEEL, DRILLING AND GROUTING, SAW CUTTING, RELOCATING FENCE POSTS, RAILS AND PLATES AND ANY OTHER WORK RELATED TO PARAPET MODIFICATIONS FOR GUIDE RAIL ATTACHMENTS IN PAY ITEM "PARAPET MODIFICATIONS".
2. FOR BRIDGE ATTACHMENT TYPES AND ADDITIONAL DETAILS, REFER TO CD-609-15.

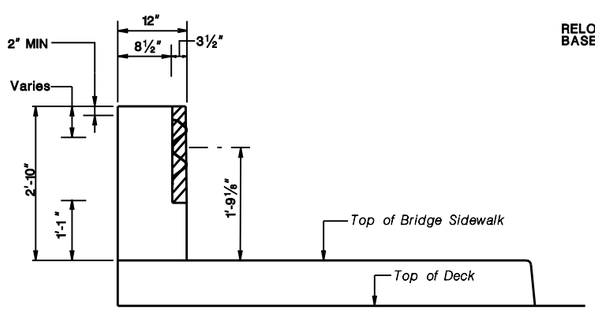

SECTION: B–B

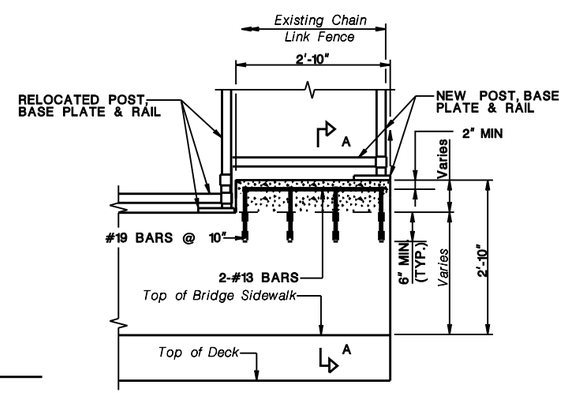

ELEVATION AT TYPE "A" ATTACHMENT
(GUIDE RAIL NOT SHOWN FOR CLARITY)

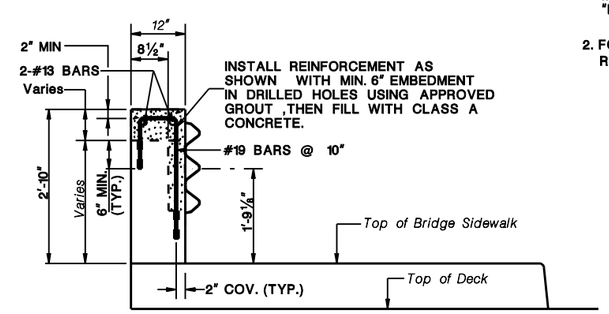

SECTION: A–A

LEGEND

REMOVE

PROPOSED CLASS A CONCRETE

PARAPET END MODIFICATIONS DETAILS

BCD-609-6.1

PARAPET AND SIDEWALK WITH CHAIN LINK FENCE

N.T.S.

BCD-609-6

NEW JERSEY DEPARTMENT OF TRANSPORTATION
BUREAU OF STRUCTURAL ENGINEERING

BRIDGE CONSTRUCTION DETAILS

146F
146

GUIDE RAIL ATTACHMENT – EXISTING STRUCTURE WITH FENCE

BDC609-01-ORIGINAL SHEET

pen table=.
scale=.
date=.
ID=.
file=.