STATE	FEDERAL PROJECT NO.
N. J.	STP-BOOS (138)

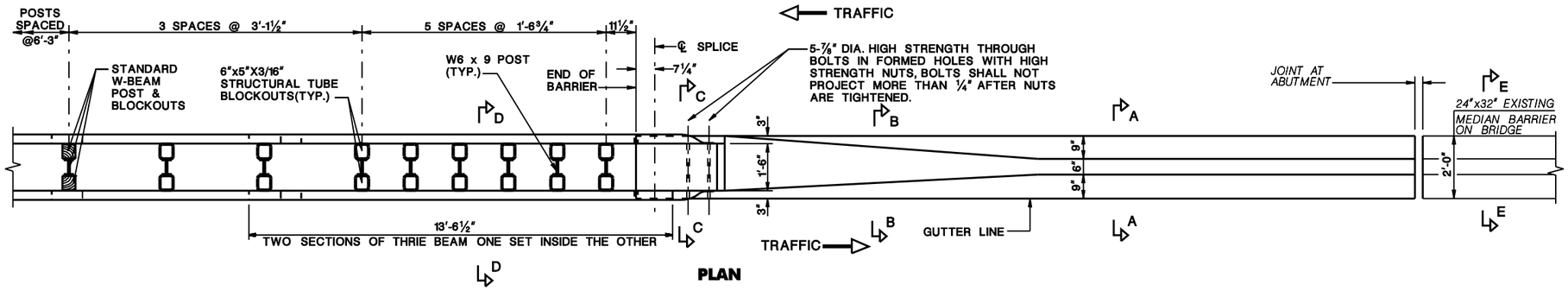

PLAN

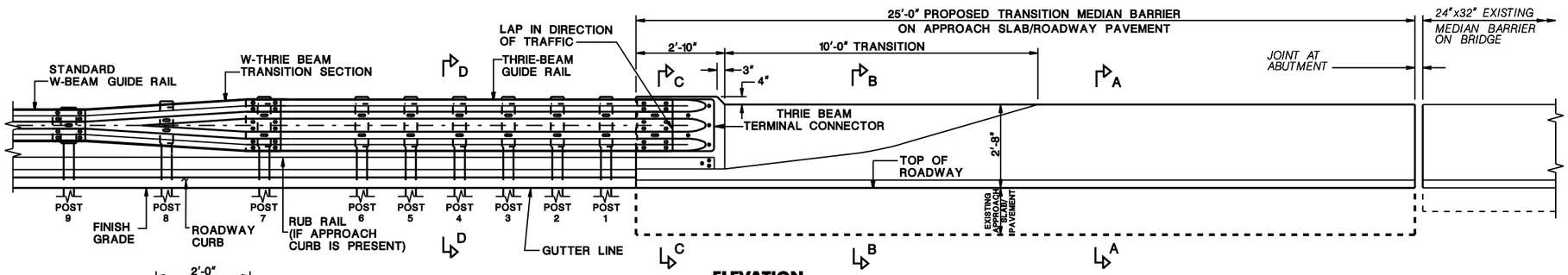

ELEVATION

BIDIRECTIONAL BEAM GUIDE RAIL ATTACHMENT DETAILS

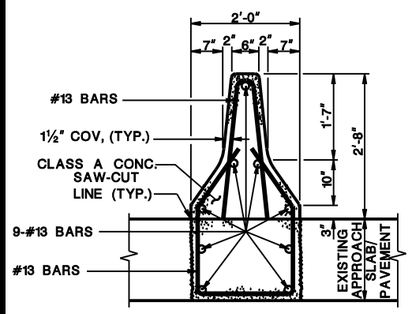

SECTION: A–A

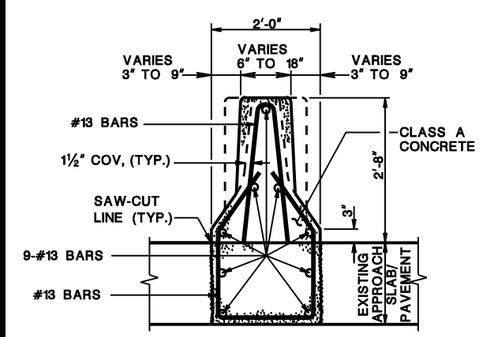

SECTION: B–B

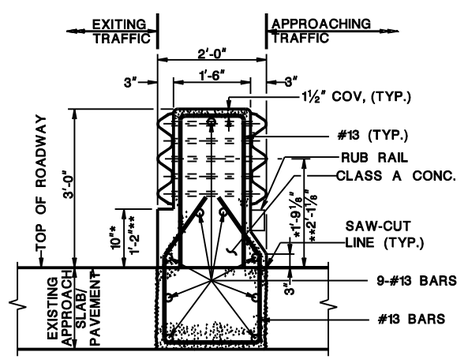

SECTION: C–C

* IF NO ROADWAY CURB IS PRESENT
** IF ROADWAY CURB IS PRESENT

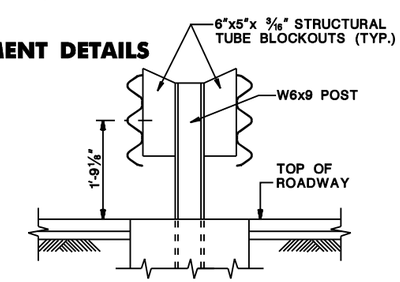

SECTION: D–D

IF NO ROADWAY CURB IS PRESENT, MEASURE HEIGHT FROM TOP OF PAVEMENT.

IF ROADWAY CURB IS PRESENT, MEASURE HEIGHT FROM TOP OF CURB.

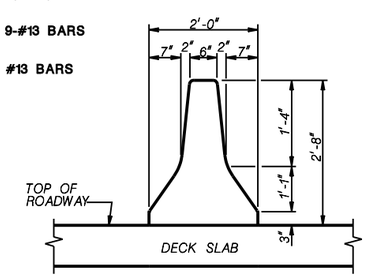

SECTION: E–E

NOTES:

1. THIS GUIDE RAIL TRANSITION IS APPROPRIATE FOR CONNECTION TO A VERTICAL CONCRETE SHAPE AND NOT CONNECTED DIRECTLY TO A CONCRETE SAFETY SHAPE. TRANSITION CONCRETE SAFETY BARRIER TO A VERTICAL SHAPE AT THE GUIDE RAIL CONNECTION.
2. ENSURE THAT ALL CROSS SLOPES BETWEEN THE PAVEMENT EDGE AND POSTS ARE 10H:1V OR FLATTER.
3. EMBANKMENT MATERIAL CONFORMING TO THE NJDOT STANDARD SPECIFICATIONS SECTION 203 IS EXTEND FLAT BEHIND THE POSTS AT LEAST 2'-0" AT WHICH POINT A SLOPE OF NO STEEPER THAN 2H:1V, EXTEND A MINIMUM OF 4'-0" FURTHER.
4. AT TYPE (A) ATTACHMENTS, THRIE BEAM RAIL ELEMENT IS REQUIRE ADDITIONAL POST MOUNTING HOLES FOR POST #1, #3 AND #5. CAUTION, HOLES ARE PUNCHED OR DRILLED BEFORE GALVANIZATION. NO FIELD DRILLING IS PERMITTED.
5. POSTS 1 THRU 7 IS 7'-2" LONG WITH 4'-10" POST EMBEDMENT. POST 8 IS 6'-8" LONG WITH 4'-6" POST EMBEDMENT. POST 9 IS 6'-8" LONG WITH 4'-4" POST EMBEDMENT.
6. LOCATE CONDUIT AT END OF BARRIER PARAPETS SO AS NOT TO INTERFERE WITH GUIDE RAIL POST SPACING.
7. LOCATE DRAINAGE INLETS AND ELECTRICAL JUNCTION BOXES ON APPROACHES SO AS NOT TO INTERFERE WITH GUIDE RAIL POST SPACING.
8. CONFORM STRUCTURAL STEEL PLATES AND SHAPES TO AASHTO M270 AND GALAVANIZED PER AASHTO M111.
9. CONFORM HIGH STRENGTH STEEL BOLTS, NUTS AND WASHERS TO AASHTO M164. TREAT ZINC COATED BOLTS, NUTS AND WASHERS ACCORDING TO AASHTO M232M.
10. ENSURE THAT THE THICKNESS OF THRIE-BEAM, W-BEAM AND W-THRIE BEAM TRANSITION IS 12-GAUGE.
11. FOR ADDITIONAL THRIE BEAM AND W-BEAM DETAILS REFER TO CD-609-12.
12. CONFORM REINFORCEMENT STEEL TO ASTM A615 (GRADE 60).
13. PAY COST OF ALL LABOR AND MATERIAL TO CONSTRUCT TRANSITION MEDIAN BARRIER UNDER ITEM, "REINFORCED CONCRETE BARRIER CURB".

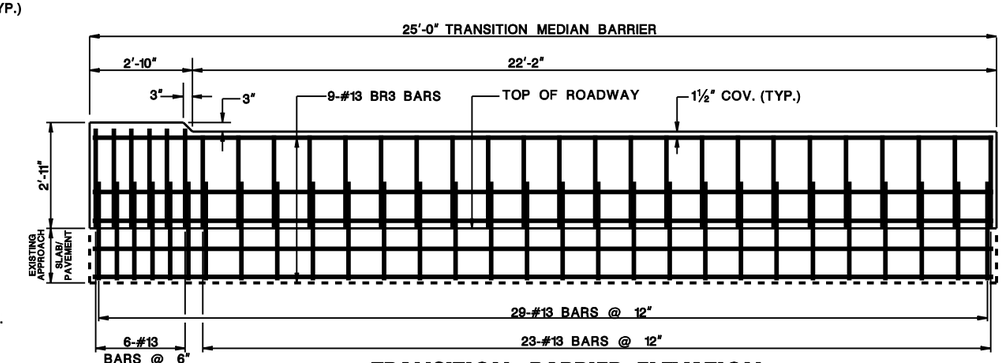

TRANSITION BARRIER ELEVATION

BIDIRECTIONAL BEAM GUIDE RAIL ATTACHMENT TO 24"X32" TRANSITION MEDIAN BARRIER

BCD-609-9

NEW JERSEY DEPARTMENT OF TRANSPORTATION
BUREAU OF STRUCTURAL ENGINEERING

BRIDGE CONSTRUCTION DEATILS

BCD-609-9.1

BCD-01-ORIGINAL SHEET
pen table=.
scale=.
date=.
ID=.
file=.