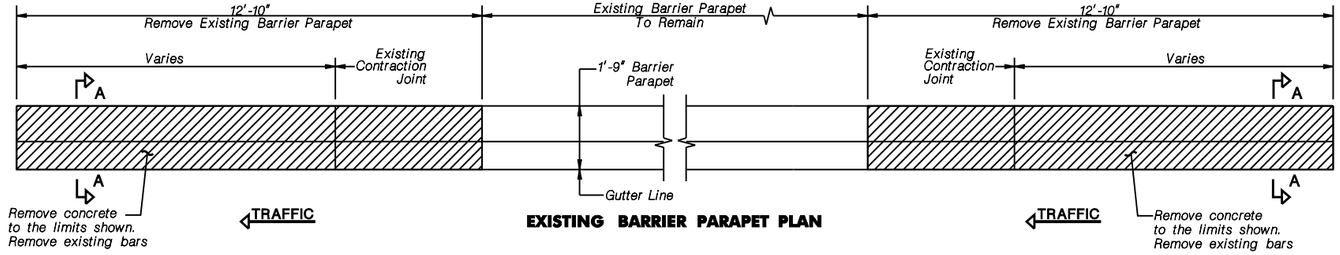

EXISTING BARRIER PARAPET PLAN

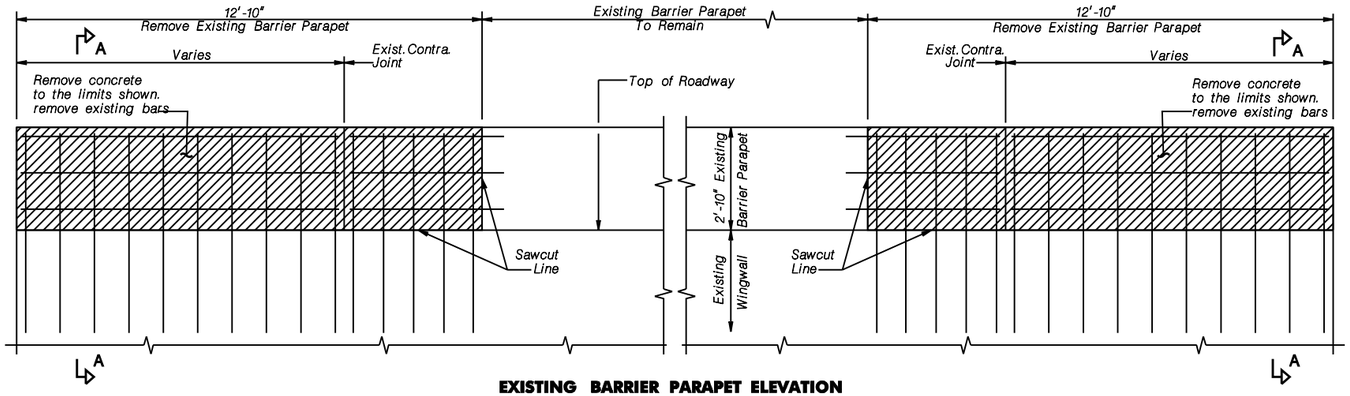

EXISTING BARRIER PARAPET ELEVATION

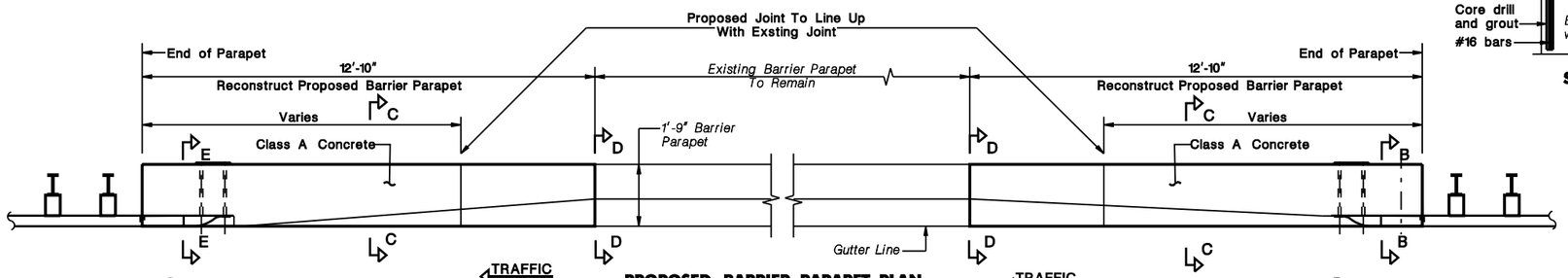

PROPOSED BARRIER PARAPET PLAN

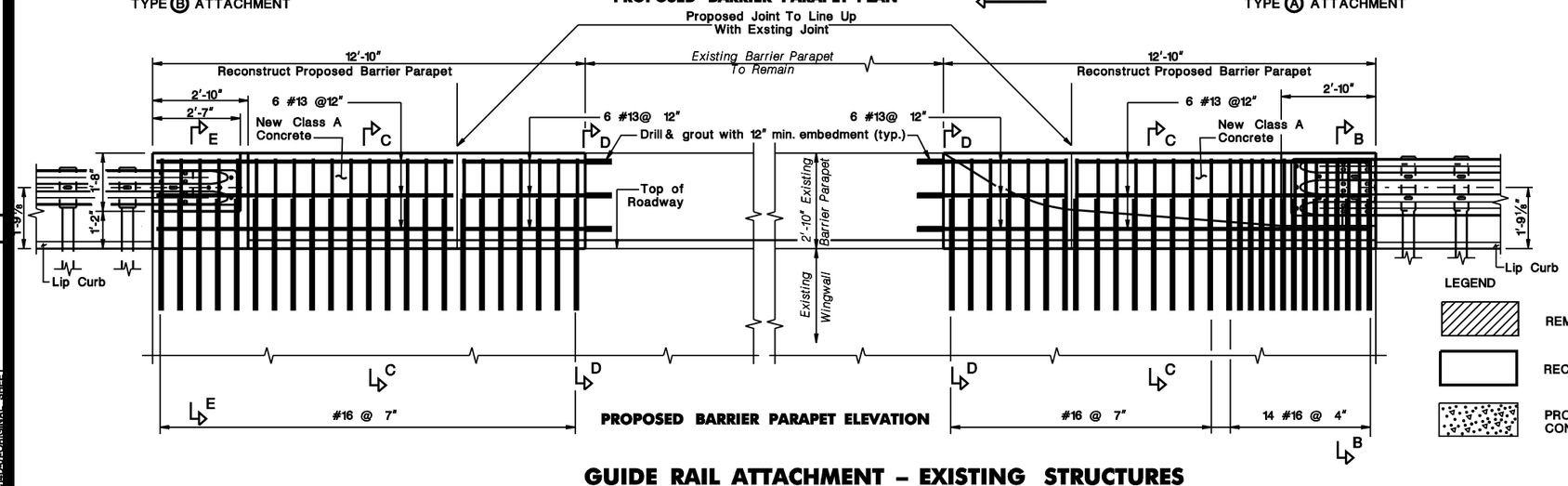

PROPOSED BARRIER PARAPET ELEVATION

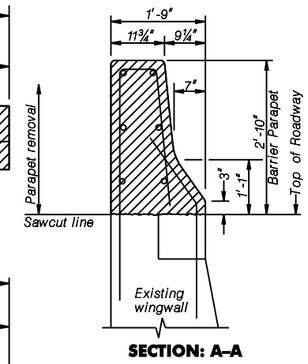

SECTION: A–A

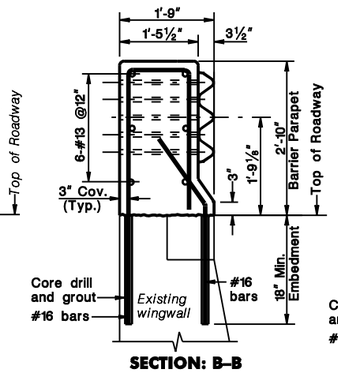

SECTION: B–B

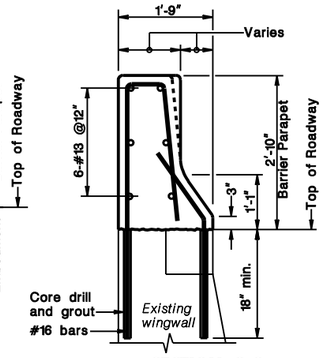

SECTION: C–C

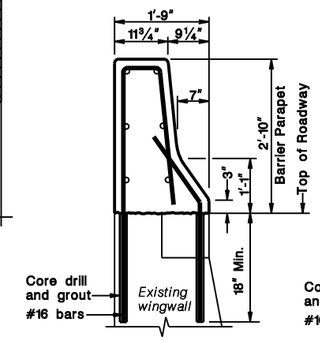

SECTION: D–D

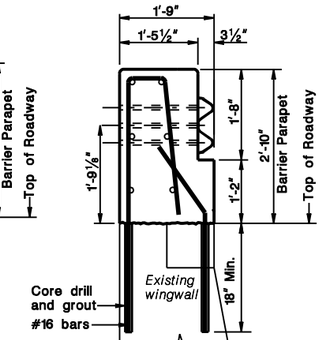

SECTION: E–E

NOTES:

1. Include cost for constructing transition barrier in the cost for the item, "BARRIER PARAPET MODIFICATIONS". This includes but not limited to, saw cutting, removal of concrete, drilling, grouting, new reinforcement and concrete.

2. Refer to CD-609-13 for guide rail attachment and lip curb details.

LEGEND

REMOVE

RECONSTRUCT

PROPOSED CLASS A CONCRETE

BCD-609-3.1

GUIDE RAIL ATTACHMENT – EXISTING STRUCTURES
NEW JERSEY BARRIER SHAPE PARAPET ON WINGWALL WITHOUT ROADWAY CURBING ON APPROACH

BARRIER PARAPET MODIFICATION FOR GUIDE RAIL (SHEET 3 OF 4)

N.T.S.

BCD-609-3

NEW JERSEY DEPARTMENT OF TRANSPORTATION
BUREAU OF STRUCTURAL ENGINEERING

BRIDGE CONSTRUCTION DETAILS

146C
146

BCD040-R-ORIGINAL SHEET

pen table=.
scale=.
date=.
ID=.
file=.