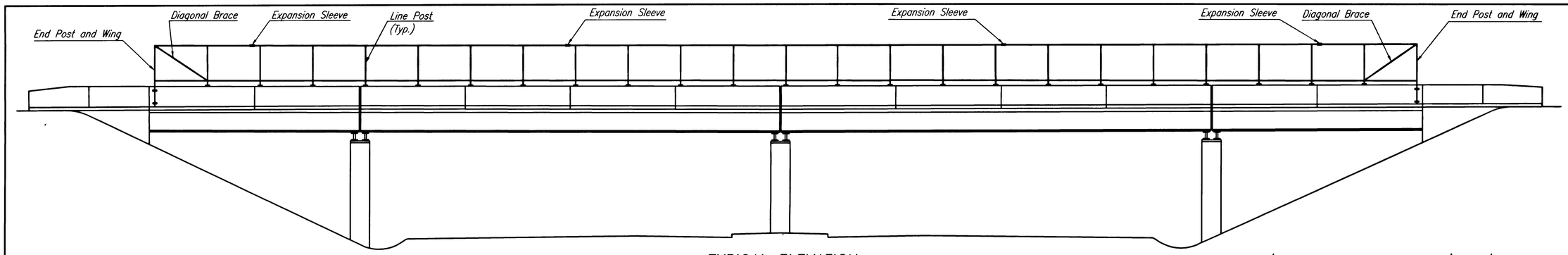

TYPICAL ELEVATION

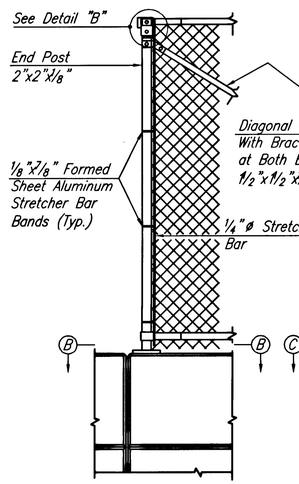

END POST

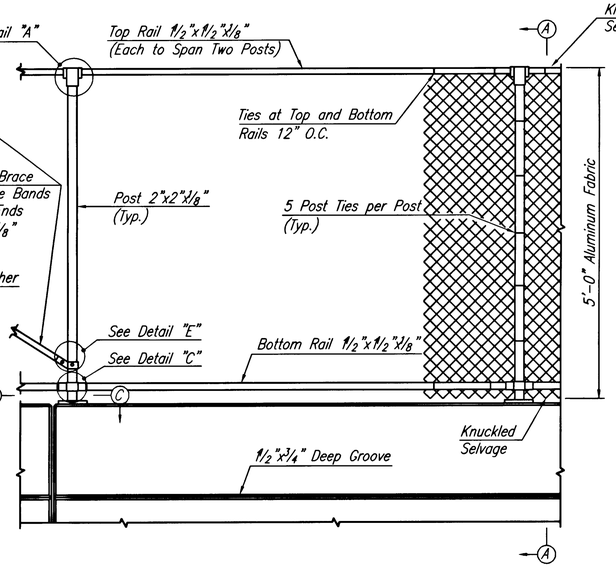

DETAILED ELEVATION

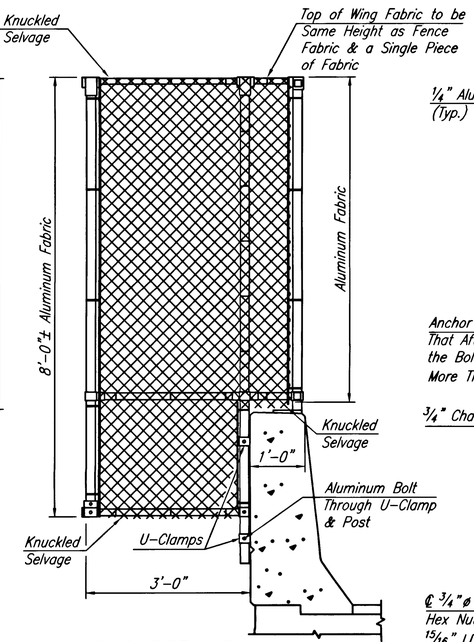

WING DETAILS

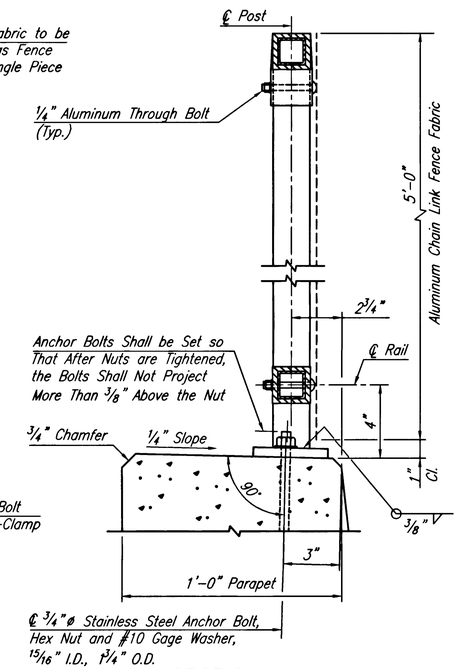

SECTION A–A

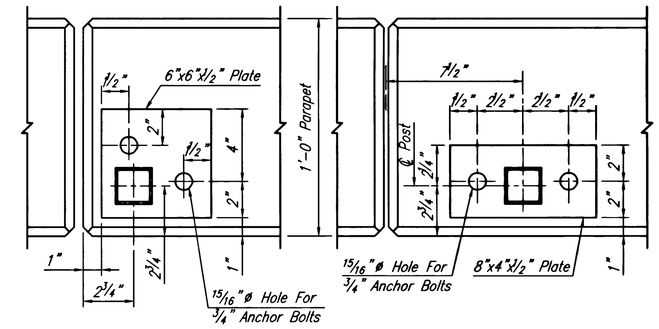

SECTION B–B

SECTION C–C

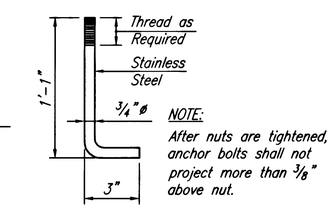

NOTE:
After nuts are tightened, anchor bolts shall not project more than 3/8" above nut.

ANCHOR BOLT DETAIL

NOTES:

1. Bridge Fencing shall conform to Section 511.
2. Steel surfaces shall be prevented from coming in contact with aluminum surfaces by means of a protective coating or pads of neoprene or similar material placed between the dissimilar metals; as approved by the Engineer.
3. For details not shown on this sheet see Standard Drawing BF–2.

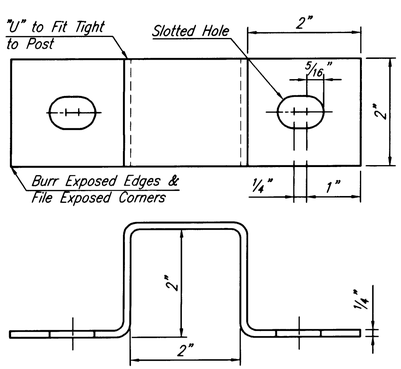

DETAIL OF ALUMINUM U–CLAMP

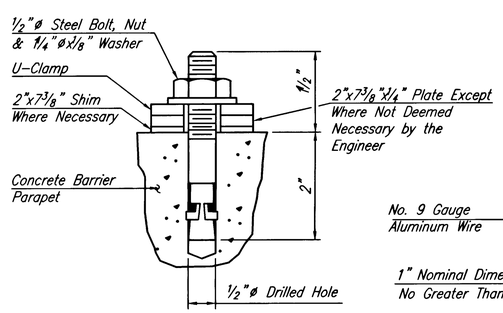

DETAIL OF ANCHOR BOLT FOR U–CLAMP

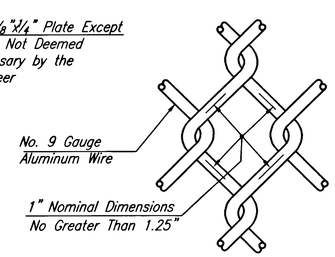

DETAIL OF ALUMINUM FABRIC

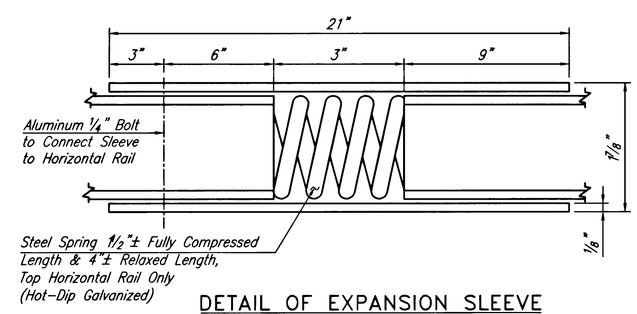

DETAIL OF EXPANSION SLEEVE

ORIGINAL SIZE IN INCHES

App.	No.	DATE	REVISION
		2/05	REISSUED; CONFORMS TO 2004 SPECS

NEW JERSEY TURNPIKE AUTHORITY
NEW JERSEY TURNPIKE

BRIDGE FENCING
BARRIER PARAPET MOUNTED

OFFICE OF THE CHIEF ENGINEER
WOODBRIDGE, NEW JERSEY

2004 STANDARD DRAWING BF–3

CONTRACT NO. SHEET NO. OF