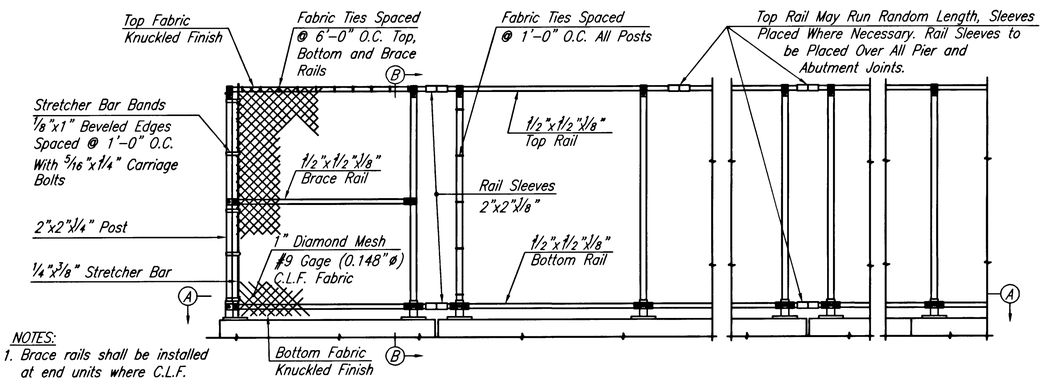

NOTES:
1. Brace rails shall be installed at end units where C.L.F. fabric is tensioned.
2. C.L.F. fabric shall be continuous across all joints.
3. For details of C.L.F. fabric, see Standard Dwg. BF-3.

INTERIOR ELEVATION – PARAPET & CHAIN LINK FENCE
1/2" = 1'-0"

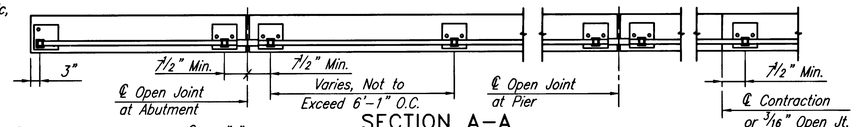

SECTION A–A
1/2" = 1'-0"

NOTE:
Railing expansion sleeve spring shall not exceed 1/2" fully compressed. Rail ends to be 3 inches apart in sleeve @ ℄ sleeve "V" crimp.

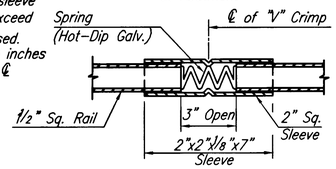

RAIL SLEEVE DETAIL
3" = 1'-0"

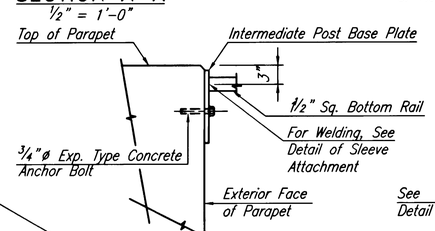

WING ANCHORAGE DETAIL
1/2" = 1'-0"

CASTING NOTES:
All holes in castings shall be 7/16"ø. Castings shall conform to Subsection 914.03 (F). All castings shall be designed to accomodate rails at grades as required.

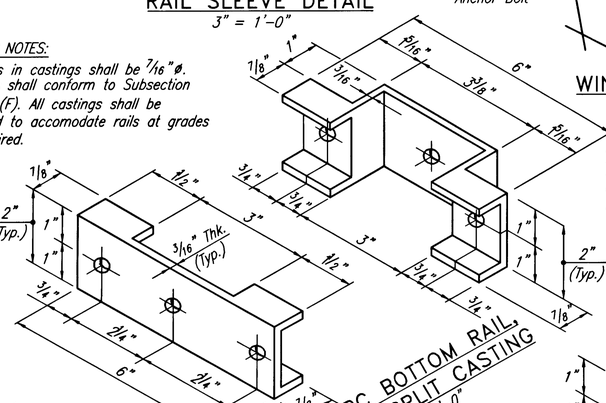

DETAIL PC BOTTOM RAIL, LINE POST SPLIT CASTING
6" = 1'-0"

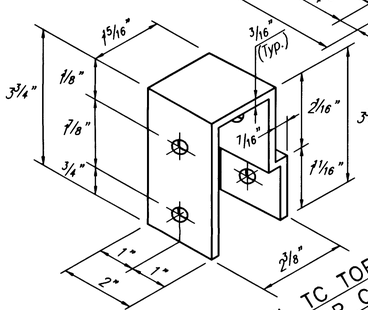

DETAIL TC TOP RAIL, POST TOP CASTING
6" = 1'-0"

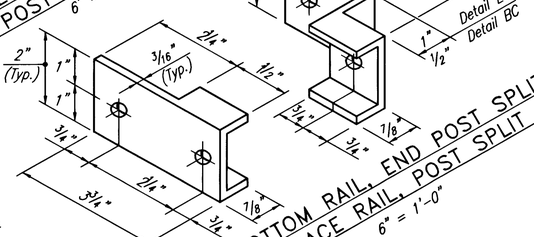

DETAIL EC BOTTOM RAIL, END POST SPLIT CASTING
DETAIL BC BRACE RAIL, POST SPLIT CASTING
6" = 1'-0"

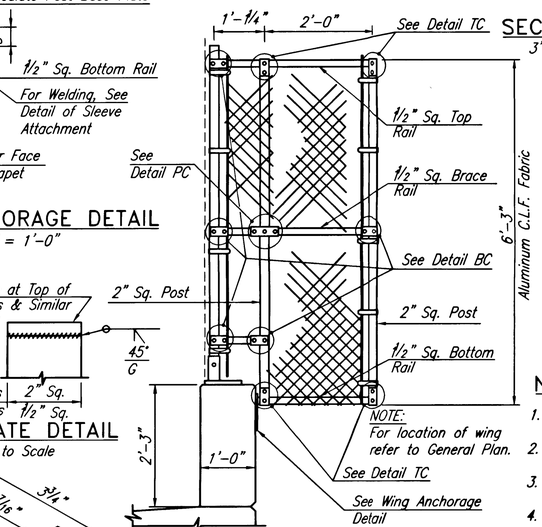

NOTE:
For location of wing refer to General Plan.

ELEVATION OF WING
3/4" = 1'-0"

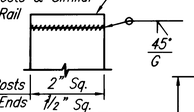

DAM PLATE DETAIL
Not to Scale

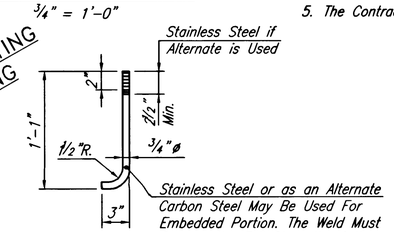

NOTE:
Stake each anchor bolt at one (1) point only.

ANCHOR BOLT DETAIL
Not to Scale

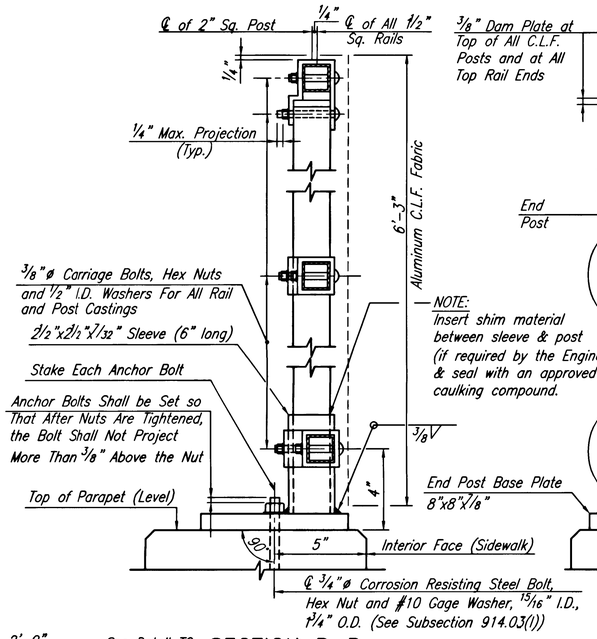

NOTE:
Insert shim material between sleeve & post (if required by the Engineer) & seal with an approved caulking compound.

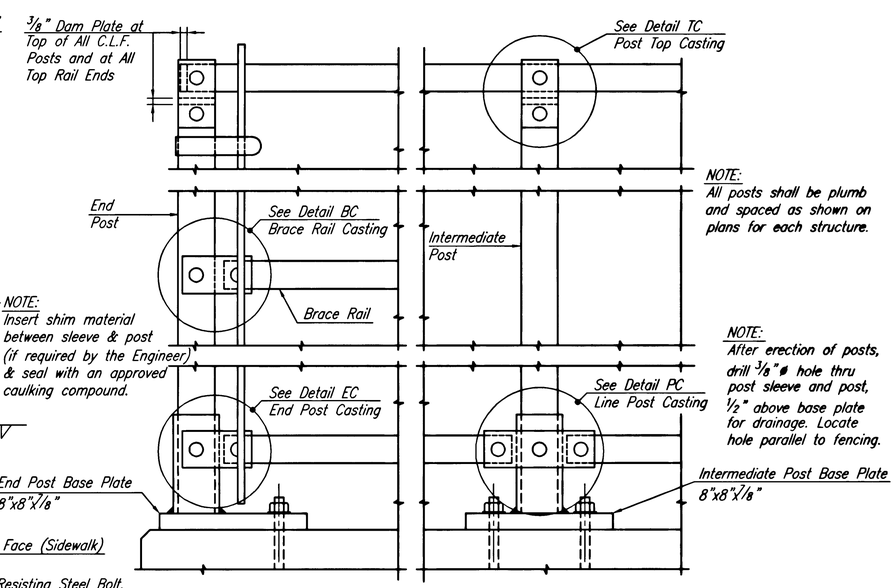

NOTE:
All posts shall be plumb and spaced as shown on plans for each structure.

NOTE:
After erection of posts, drill 3/8"ø hole thru post sleeve and post, 1/2" above base plate for drainage. Locate hole parallel to fencing.

PART INTERIOR ELEVATION OF CHAIN LINK FENCE
(C.L.F. Fabric Not Shown For Clarity)
3" = 1'-0"

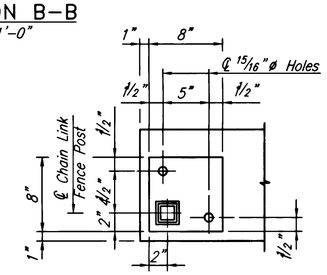

END POST BASE PLATE
1/2" = 1'-0"

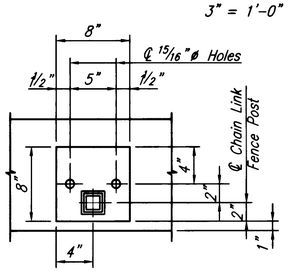

INTERMEDIATE POST BASE PLATE
1/2" = 1'-0"

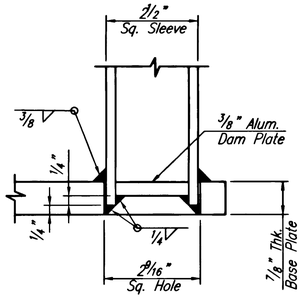

DETAIL OF SLEEVE ATTACHMENT
6" = 1'-0"

NOTES:
1. Bridge Fencing shall conform to Section 511.
2. Shim material shall be used where necessary for post alignment and shall conform to Subsection 911.01.
3. Fillet weld material shall conform to Subsection 911.01.
4. After erection all anchor bolt holes and space between base plates and concrete shall be thoroughly caulked with an aluminum impregnated caulking compound conforming to Subsection 923.05.
5. The Contractor shall verify all dimensions & conditions in the field.

0 1/2 1 2 3 4
ORIGINAL SIZE IN INCHES

App.	No.	DATE	REVISION
		2/05	REISSUED; CONFORMS TO 2004 SPECS

NEW JERSEY TURNPIKE AUTHORITY
NEW JERSEY TURNPIKE

BRIDGE FENCING
6'-3" HIGH

OFFICE OF THE CHIEF ENGINEER
WOODBRIDGE, NEW JERSEY

2004 STANDARD DRAWING BF-4

CONTRACT NO. SHEET NO. OF