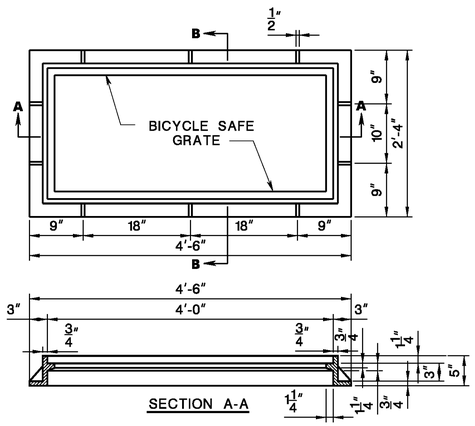

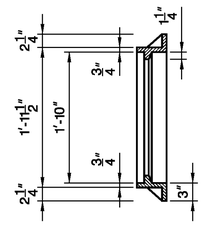

FRAME FOR INLETS, TYPE G1
(FOR USE WITH DROP INLET D1)

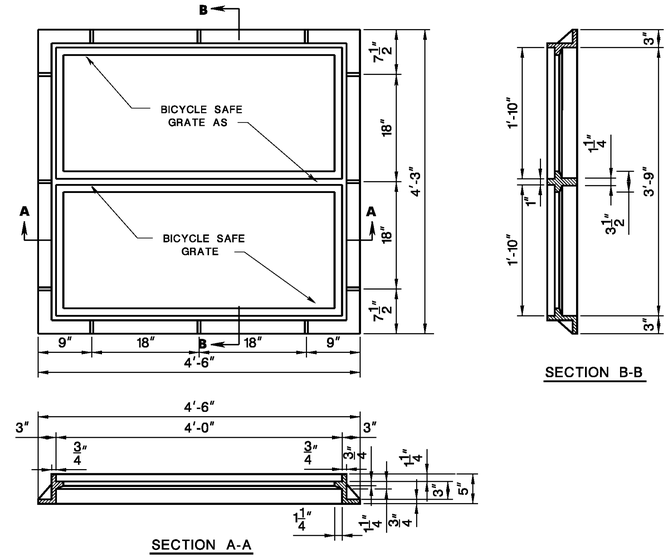

FRAME FOR INLETS, TYPE G-2
(FOR USE WITH DROP INLET D2)

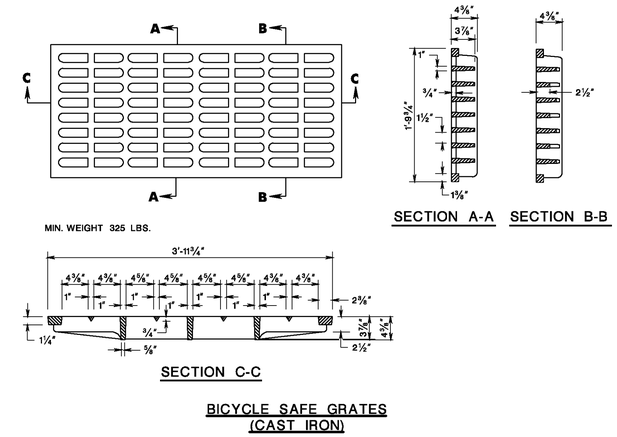

BICYCLE SAFE GRATES
(CAST IRON)

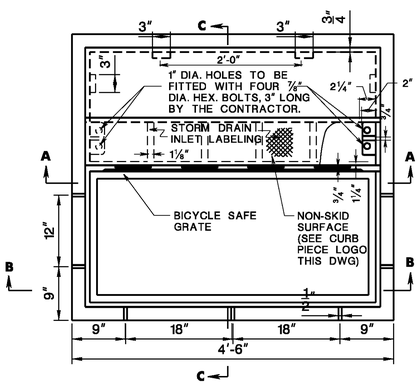

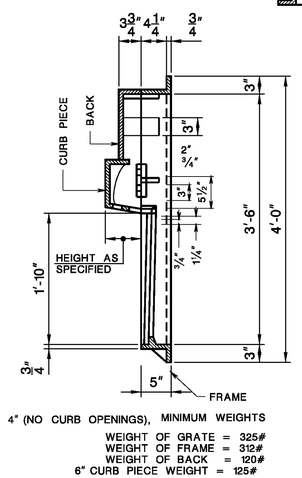

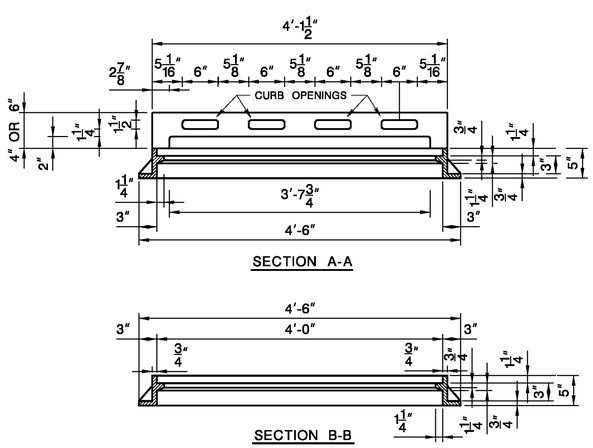

FRAME AND GRATING - TYPE G3
(FOR USE WITH DROP INLET D3)

CURB PIECE LOGO

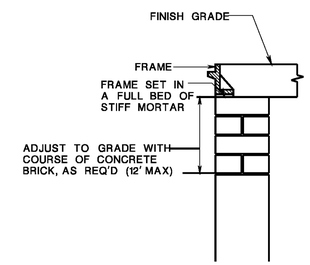

FRAME SETTING DETAIL

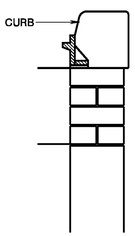

DETAIL AT CURB

NOTES:

1. GRATE & FRAME SHALL BE GRAY CAST IRON CONFORMING TO ASTM A-48, CLASS 30B.
2. STORM DRAIN INLET LABEL SHOULD READ "NO DUMPING, DRAINS TO WATERWAY" OR OTHERWISE APPROVED BY THE ENGINEER. FISH LOGOS SHALL BE INCLUDED ON BOTH SIDES OF THE LABEL.
3. 4" HIGH CURB PIECE WITHOUT CURB OPENINGS, USED ON ALL PROJECTS UNLESS 6" IS SPECIFICALLY CALLED FOR.

0 ½ 1 2 3 4
ORIGINAL SIZE IN INCHES

App.	No.	DATE	REVISION
	3	6/07	REVISED; GRATE TO CONFORM TO NJDEP CRITERIA
	2	5/88	MINOR REVISIONS
	1	7/87	CHANGE TO CONCRETE BRICK
		3/87	REISSUED; CONFORMS TO 1987 SPECS.

NEW JERSEY TURNPIKE AUTHORITY
NEW JERSEY TURNPIKE

CAST FRAME AND GRATING DETAILS

OFFICE OF THE CHIEF ENGINEER
NEW BRUNSWICK, NEW JERSEY

1987 STANDARD DRAWING DR-2

CONTRACT NO. SHEET NO. OF