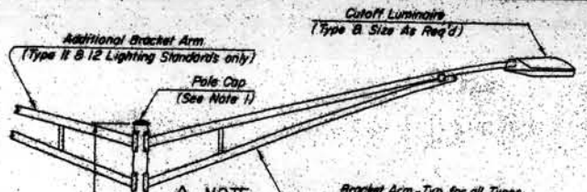


## NOTE

The lighting standard details shown on this drawing are based on equipment originally manufactured by Pilot Pole Products, Newark, NJ (no longer in business). Hapco Pole Products and Valmont Industries are approved manufacturers, however each item shall be specifically approved as indicated below. All components must be fully interchangeable and similar in quality with existing poles, arms, and bases.

This drawing is not intended as a fabrication document. The details shown herein indicate the intent, quality, character and critical features of the design which shall be maintained by all vendors and fabricators. As required by the Specifications, the Contractor shall submit design calculations, signed and sealed by a Professional Engineer, and a letter from the same undersigning engineer certifying that all lighting standard components meet the requirements of the most recent edition of AASHTO Standard Specifications for Structural Supports for Highway Signs, Luminaires, and Traffic Signals. These calculations and certifications shall be submitted for every type of Lighting Standard used on each Project. A comprehensive review and final determination for approval of all lighting standard equipment will be made by the Engineer prior to manufacture or use.

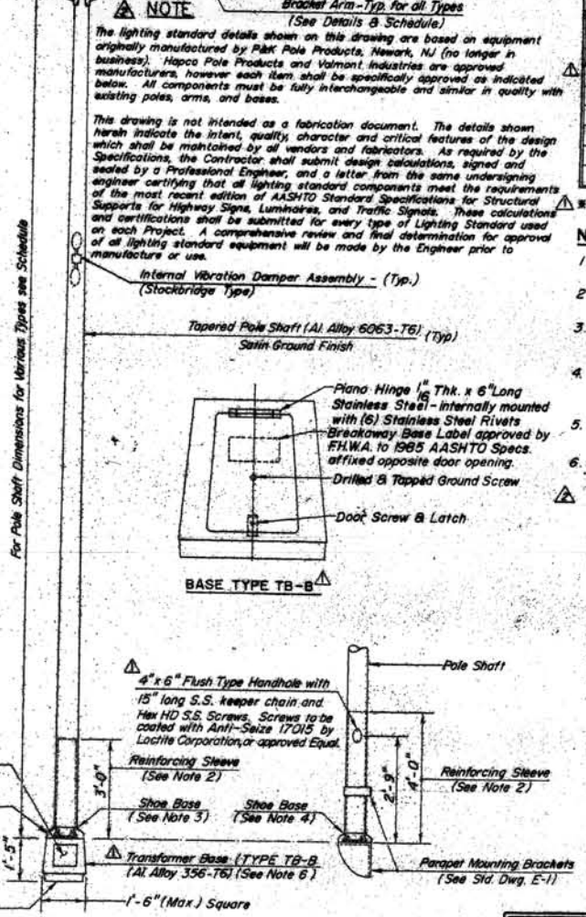


LIGHTING STANDARDS
No Scale

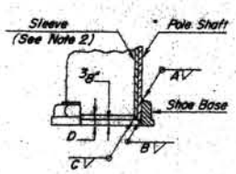


BASE WELDING DETAIL
No Scale

| LTG. STD. TYPE | WELD SIZES A | B | C | D |
|---|---|---|---|---|
| 7, 8 & 12 | 3/8" | 1/4" | None | 3/8" |
| 9 & 10 | 3/8" | 1/4" | 1/4" | 3/16" |
| 11 | 3/8" | 5/16" | 1/4" | 5/16" |

## LIGHTING STANDARD SCHEDULE

| TYPES | MTG. * | BRACKET ARM NO. | BRACKET ARM LENGTH | POLE SHAFT LENGTH | POLE SHAFT TAPER | POLE SHAFT WALL THK. | MAX. LUMINAIRE SIZES WEIGHT | MAX. LUMINAIRE SIZES EFF. PROJ. AREA |
|---|---|---|---|---|---|---|---|---|
| TYPE 7 | TB-B | 1 | 15' | 36'-3" | 10"x6 5/8" | .250" | 50# | 1.2 Sq. Ft. |
| TYPE 8 | TB-B | 1 | 8' | 36'-3" | 10"x6 5/8" | .250" | | |
| TYPE 9 | MB | 1 | 15' | 37' | 8"x6 5/8" | .250" | | |
| TYPE 10 | MB | 1 | 8' | 37' | 8"x6 5/8" | .250" | | |
| TYPE 11 | TB-B | 2 | 15' | 36'-3" | 10"x6 5/8" | .250" | | |
| TYPE 12 | TB-B | 2 | 8' | 36'-3" | 10"x6 5/8" | .250" | | |

* Transformer Base (Type as Noted) or Mounting Brackets (MB)

## NOTES

1. Pole cap (Al. Alloy 356 or 43) attached with 3/8" S.S. set screws. For lighting standards with emergency luminaires, pole top slipfitter cap shall be used (See Detail).
2. Tight fitted .188 thick reinforcing sleeve (Al. Alloy 6063-T6) shall be welded to pole shaft for lighting standards Types 9, 10 & 11 only.
3. Shoe base for 10" O.D. pole shaft (Al. Alloy 356-T6) with 13"-15" Ø bolt circle, shall be provided with cast Al. Alloy bolt covers and stainless steel 1 1/4" Ø hex head connection bolts, nuts, lock washers and flat washers (4 Req'd).
4. Shoe base for 8" O.D. pole shaft (Al. Alloy 356-T6) with 11"-12" Ø bolt circle, shall be provided with cast Al. Alloy bolt covers and stainless steel 1" Ø hex head connection bolts, nuts, lock washers and flat washers (4 Req'd).
5. Upper and lower members of bracket arms shall be manufactured from 3 1/2" O.D. tube with .125" (Min.) wall thickness, tapered to 3 1/2" x 2 3/8" O.D. (Al. Alloy 6063-T6).
6. Transformer base shall be certified to meet 1985 AASHTO breakaway criteria and shall bear such label.

Notes Continue Below.

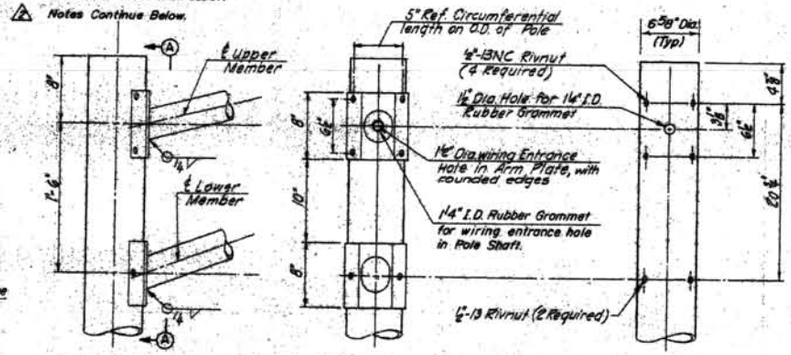


SECTION A-A

BRACKET ARM REMOVED

BRACKET ARM CONNECTION DETAILS
1/2" = 1'-0"

DETAILS THIS SHEET FOR USE ON TURNPIKE ONLY (SEE NOTE 7)

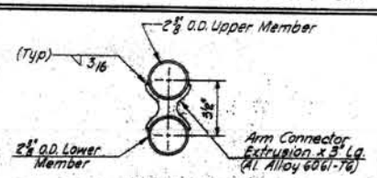


DETAIL-B
3" = 1'-0"

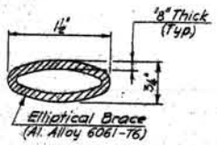


DETAIL-C
Full Scale

7. Details shown to replace existing installations only. For details of lighting standards for use on the Garden State Parkway and new installations on the Turnpike, contact the Authority's Engineering Department.

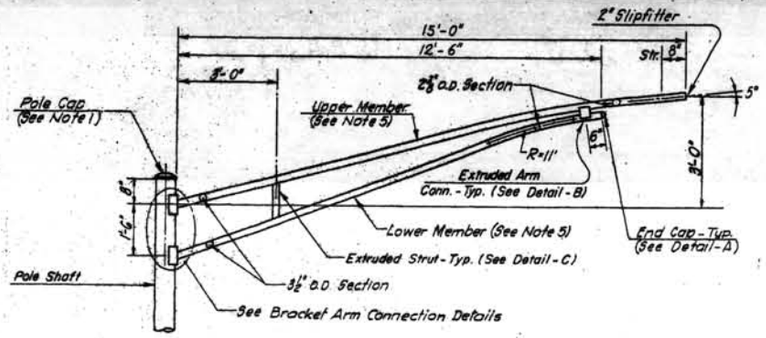


15 FT. BRACKET ARM DETAIL
1/2" = 1'-0"

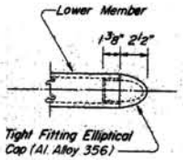


DETAIL-A
No Scale

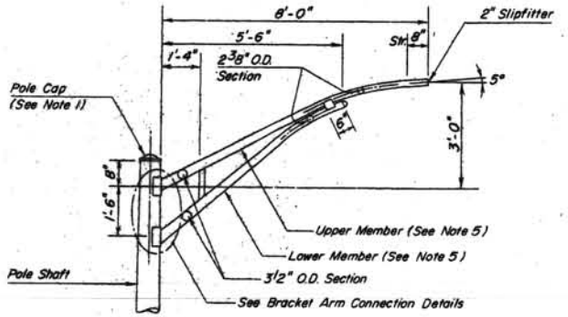


8 FT. BRACKET ARM DETAIL
1/2" = 1'-0"

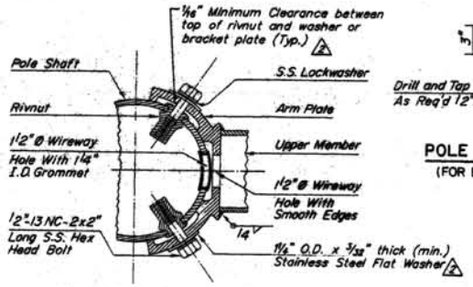


ARM CONNECTION DETAIL
No Scale
(SECTION THRU RIVNUTS AND WIREWAY)

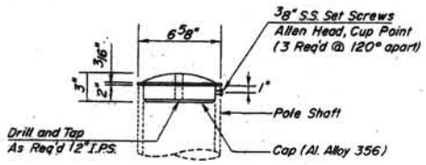


POLE TOP SLIPFITTER CAP DETAIL
(FOR EMERGENCY LIGHTING LUMINAIRES)
No Scale

0 1/2 1 2 3 4

ORIGINAL SIZE IN INCHES

| APR | NO. | DATE | REVISION |
|---|---|---|---|
| | 3 | 3-07 | REVISED FABR. NOTES, ADDED TURNPIKE ONLY REQ. |
| | 2 | 2-98 | REVISED NOTE AND ADDED MINOR REVISIONS |
| | | 12/96 | REISSUED |

NEW JERSEY TURNPIKE AUTHORITY
NEW JERSEY TURNPIKE
40 FT. LIGHTING STANDARDS - I

HOWARD NEEDLES TAMMEN & BERGENDOFF
330 Passaic Ave., Fairfield, New Jersey
JOHN M. ORMAN
N.J. P.E. License No. GE 39691

STANDARD DRAWING E-2