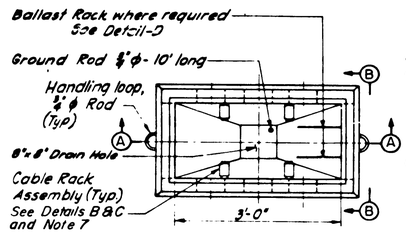

PLAN WITH COVER REMOVED
- ¾" = 1'-0"

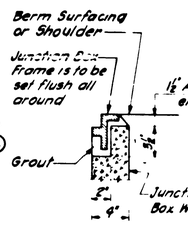

DETAIL-A
1½" = 1'-0"
This detail applies only to Type-CS Junction Boxes

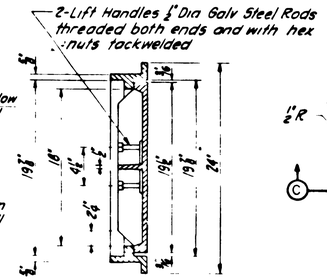

SECTION D-D
1½" = 1'-0"

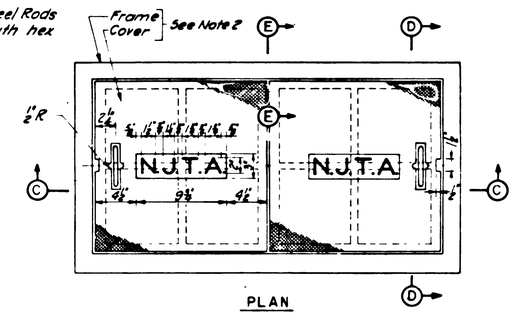

PLAN
JUNCTION BOX FRAME AND COVER
1½" = 1'-0"

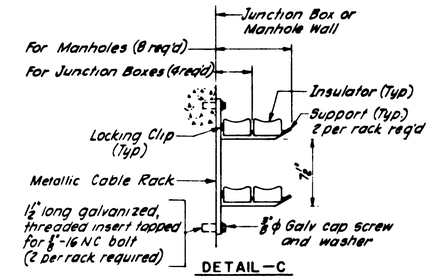

DETAIL-C

CABLE RACK ASSEMBLY
1½" = 1'-0"

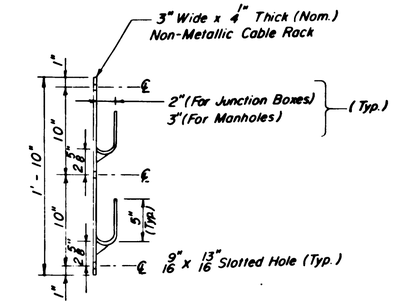

DETAIL-B
1½" = 1'-0"

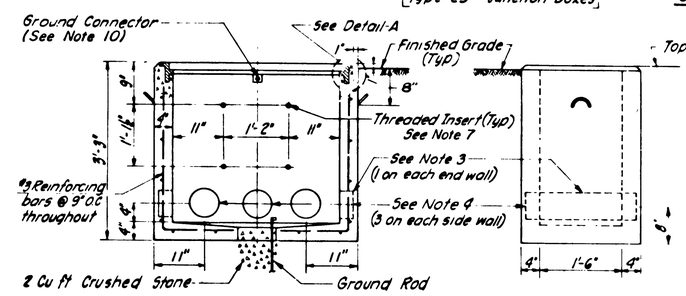

SECTION A-A
¾" - 1'-0"

SECTION B-B
¾" = 1'-0"

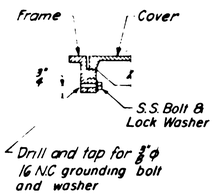

SECTION E-E
1½" = 1'-0"

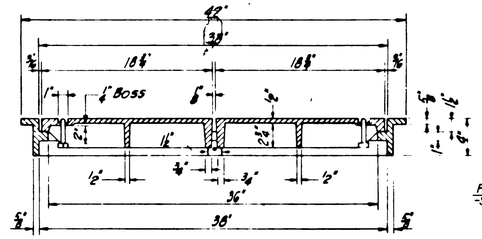

SECTION C-C
1½" = 1'-0"

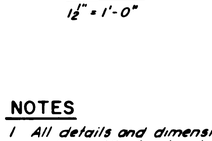

DETAIL-D

BALLAST RACK
¾" = 1'-0"

NOTES

1. All details and dimensions are the same for Type-C and Type-CS junction boxes, except the frame of Type-CS junction boxes shall be set in the field, as shown on Detail-A.
2. Frame castings for junction boxes shall be gray iron. Cover castings for junction boxes shall be ductile iron (ASTM A536 Grade 60-40-18). All castings shall be galvanized.
3. Conduit entrance hole, 6"x18" with 1" knockout wall.
4. Conduit entrance hole, 6" ϕ with 1" knockout wall
5. Bottom of junction boxes and manholes shall be sloped to drain hole
6. All electrical materials, such as cable rack assemblies, ground rod, ground connector, etc. shall be as specified.
7. Details for junction boxes and manholes reflect arrangement and threaded insert layout for metallic type cable racks. For non-metallic type cable racks, the number of locations and horizontal dimensions also apply, however vertical insert dimensions should be as shown in Detail-B.
8. Pulling irons for manholes shall be McGraw-Edison, Power Systems Cat # DU2T2, or approved equal.
9. Alternate design with 8" frame height and 24" diameter inner frame (22" opening) is acceptable.
10. Ground lug for the frame of the junction box shall be a mechanical, cast copper alloy body, brass pressure plate with brass screws (OZ Gedney type XLH or XL.)
11. Manhole Frame and Cover to be constructed of FRP (Fiber Glass Reinforced Plastic) composite materials with frame surpassing the loading requirements of H20 and EN 124. A lifting tool shall be supplied with each manhole.
12. Anchor Bolts shall conform to A.S.T.M. A307, Class A. Threading shall be 8 Threads per inch, N.C. Class 2. Hot Dipped Galvanizing shall conform to A.S.T.M. A153.
13. Concrete used in Lighting Manhole shall be Class A with air entrainment (Pre-cast or Cast-in-Place).

NOTE:

Type-C and CS junction box may be substituted with a polymer concrete box having H16 load capacity (walls and cover) as manufactured by CDR, cat. No. SA14-2436-36 or Quazite cat No PG2436Z536. Final determination for approval of substitution will be made by the Engineer prior to manufacture or use.

CONCRETE JUNCTION BOX DETAILS

TYPE-C AND TYPE-CS

(See Note 1)

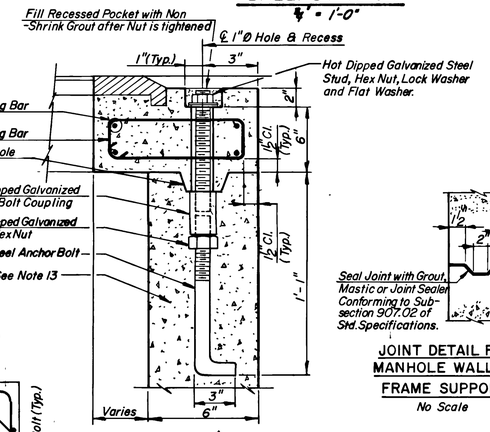

DETAIL-E
3" = 1'-0"

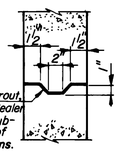

JOINT DETAIL FOR MANHOLE WALL AND FRAME SUPPORT
No Scale

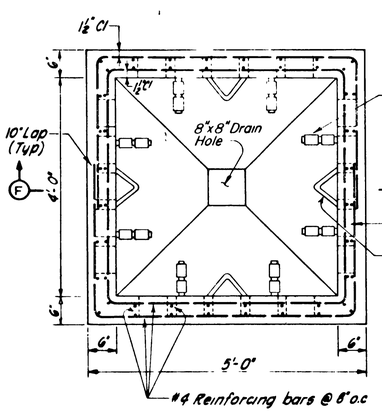

PLAN

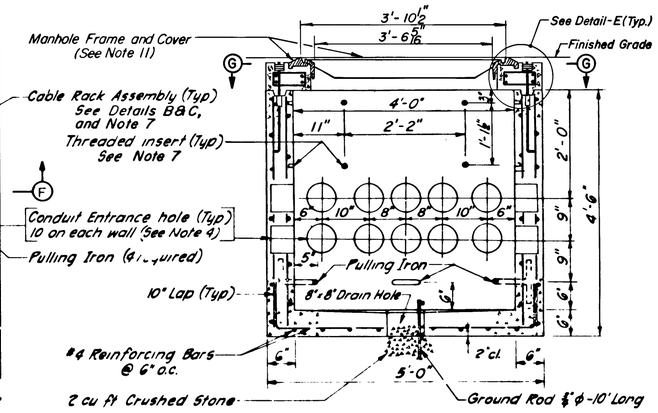

SECTION F-F

ROADWAY LIGHTING MANHOLE DETAILS
¾" = 1'-0"

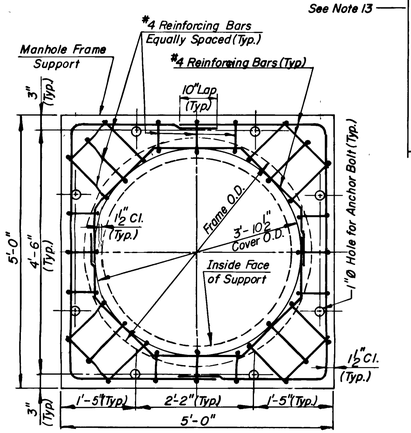

SECTION G-G

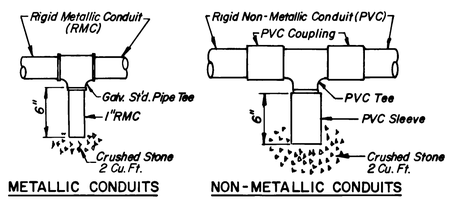

METALLIC CONDUITS — NON-METALLIC CONDUITS

TYPICAL CONDUIT TEE DETAILS
No Scale

0 ½ 1 2 3 4

ORIGINAL SIZE IN INCHES

APP.	NO	DATE	REVISION
	3	2-02	REVISED ROADWAY LIGHTING MANHOLE DETAILS
	2	6-98	REVISED NOTES
	1	2-98	REVISED NOTES
		12/96	REISSUED

NEW JERSEY TURNPIKE AUTHORITY

NEW JERSEY TURNPIKE

CONCRETE JUNCTION BOX AND ROADWAY LIGHTING MANHOLE

HOWARD NEEDLES TAMMEN & BERGENDOFF
330 Passaic Ave., Fairfield, New Jersey
JOHN M. ORMAN
N.J.P.E. License No GE 39691

STANDARD DRAWING
E-6

CONTRACT NO. SHEET NO. OF