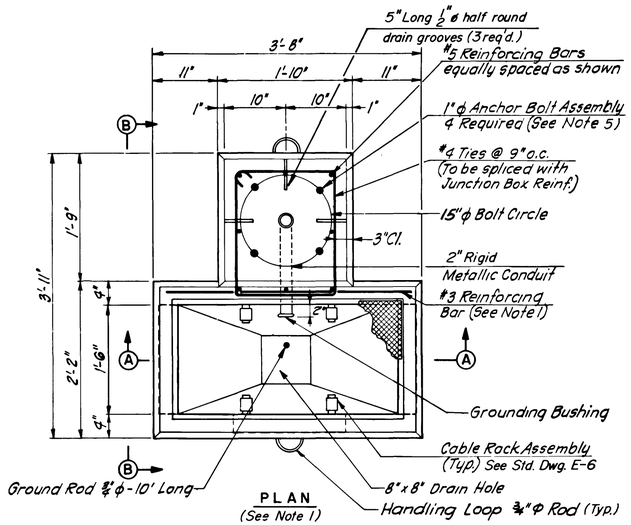

PLAN
(See Note 1)

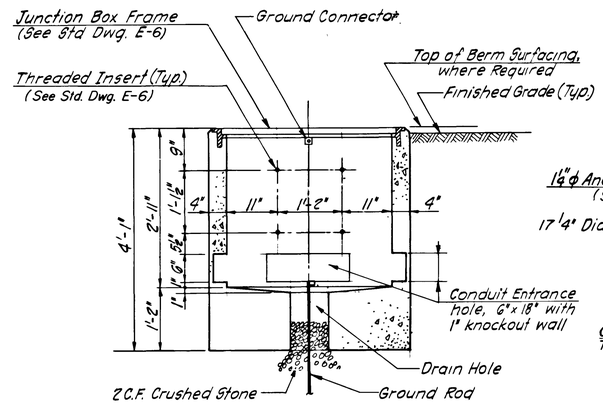

SECTION C-C
3/4" = 1'-0"
(Reinforcement not shown)

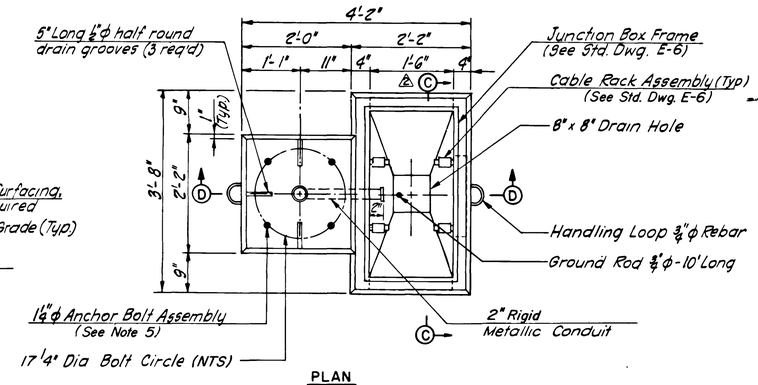

PLAN

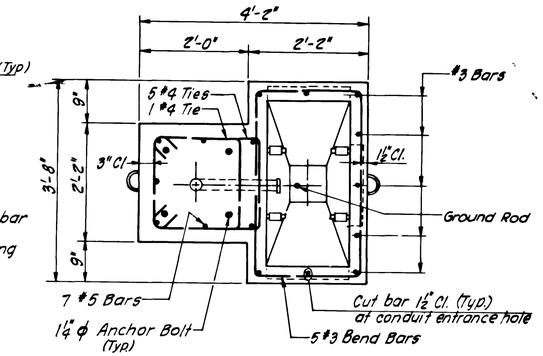

SECTION E-E

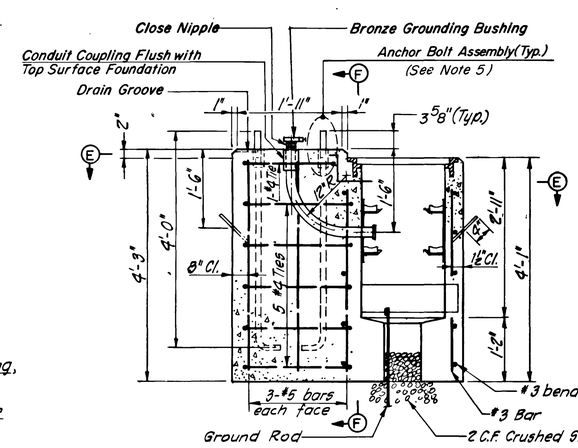

SECTION D-D

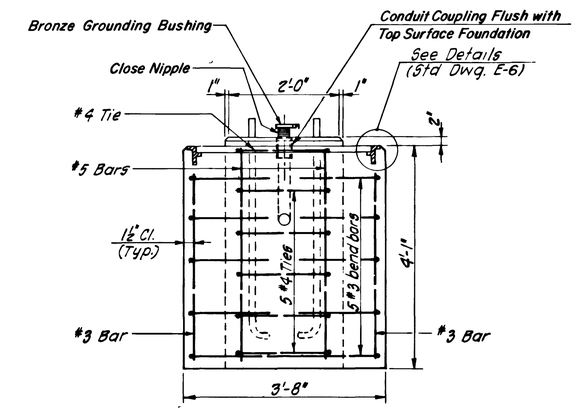

SECTION F-F

JUNCTION BOX FOUNDATION, TYPE 2

(FOR 40-FOOT LIGHTING STANDARDS)

3/4" = 1'-0"

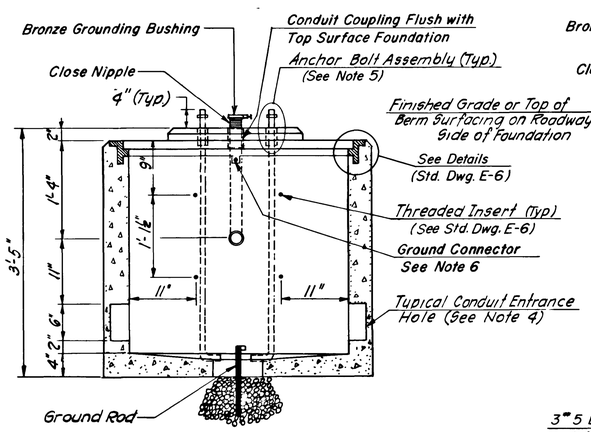

SECTION A-A

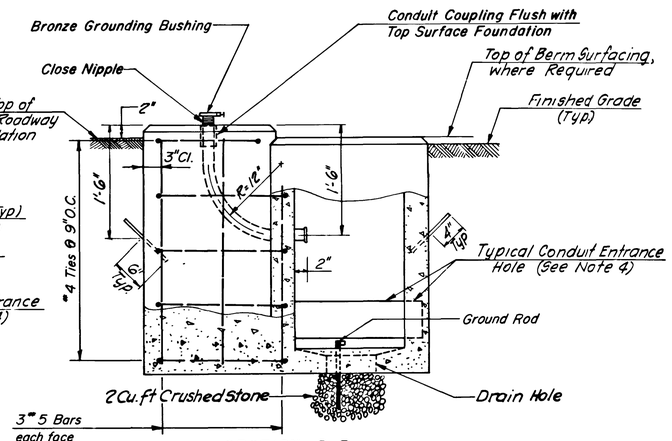

SECTION B-B
(Anchor Bolt and Cable Rack Assemblies are not shown)

JUNCTION BOX FOUNDATION, TYPE 1

(FOR 30-FOOT LIGHTING STANDARDS)

1" = 1'-0" Unless Otherwise Noted

NOTES

1. Reinforcing for junction box portion of junction box foundation shall be the same as shown for junction box detail, Std Dwg. E-6.
2. For junction box frame and cover, and all other applicable details, see Std Dwg E-6.
3. Frames of junction box foundations shall be of precast or installed in the field, same as the Type C or Type CS junction boxes, as delineated on the Plans.
4. **All three conduit entrance holes shall be 6" X 18" with 1" knockout wall.**
5. For details of Anchor Bolt Assemblies for Type 1 and Type 2 Junction Box Foundations, see Std. Dwg. E-7.
6. Ground Lug for the frame of the Junction Box shall be a Mechanical, Cast Copper Alloy Body Brass Preassure Plate with brass Screws (OZ GEDNEY Type XLH or XL)

0 1/2 1 2 3 4

ORIGINAL SIZE IN INCHES

APP.	NO.	DATE	REVISION
		12/96	REISSUED

NEW JERSEY TURNPIKE AUTHORITY
NEW JERSEY TURNPIKE

JUNCTION BOX FOUNDATIONS

HOWARD NEEDLES TAMMEN & BERGENDOFF
330 Passaic Ave., Fairfield, New Jersey
JOHN M. ORMAN
N.J.P.E. License No. GE 39691

STANDARD DRAWING E-8

CONTRACT NO. SHEET NO. OF