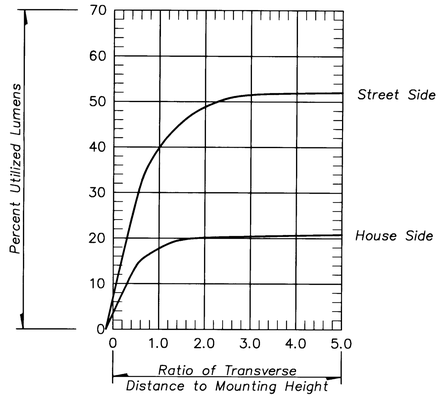

UTILIZATION CURVE

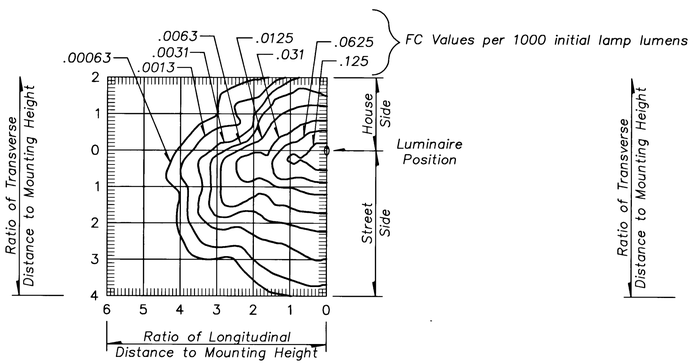

ISOFOOTCANDLE CURVE
(American Electric Co. No. P2678M)

LUMINAIRE TYPES–A & SA

(IES Distribution: Medium/Cutoff/type II)

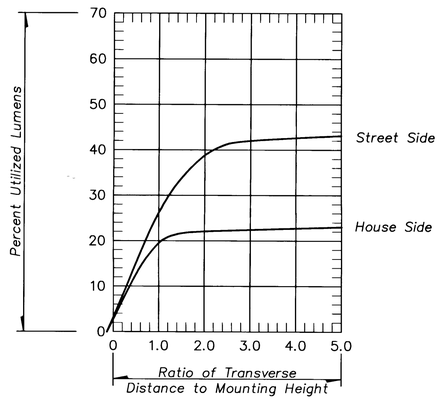

UTILIZATION CURVE

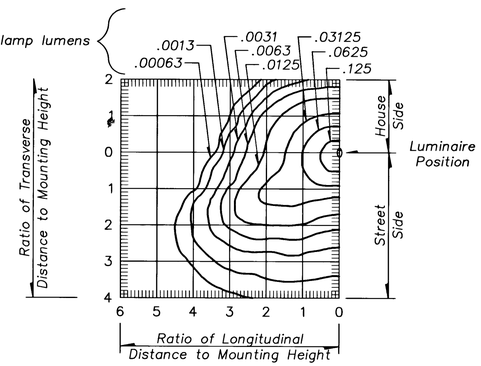

ISOFOOTCANDLE CURVE
(American Electric Co. No. P3579M)

LUMINAIRE TYPES–B & SB

(IES Distribution: Medium/Cutoff/type III)

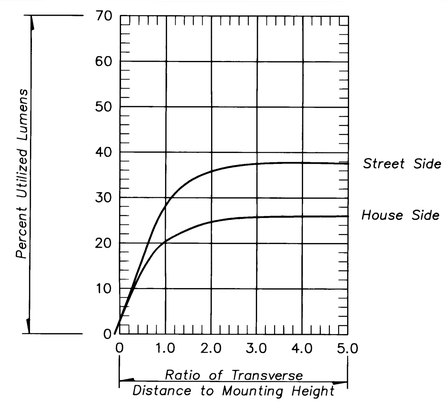

UTILIZATION CURVE

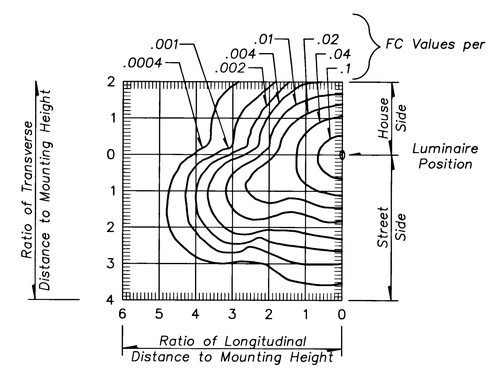

ISOFOOTCANDLE CURVE
(American Electric Co. No. P3874M)

LUMINAIRE TYPES–C & SC

(IES Distribution: Medium/Cutoff/type III)

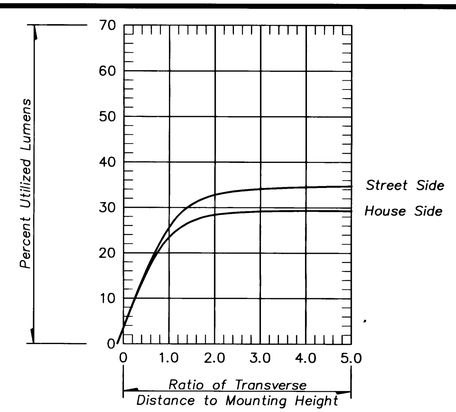

UTILIZATION CURVE

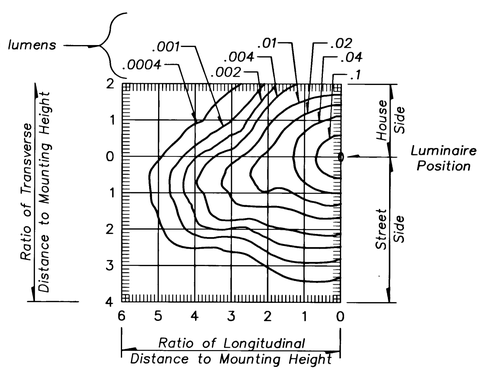

ISOFOOTCANDLE CURVE
(American Electric Co. No. P38798M)

LUMINAIRE TYPES–D & SD

(IES Distribution: Medium/Cutoff/type II)

CRITERIA FOR ILLUMINANCE LEVELS

(See Note 5)

ANSI/IES TYPE II LIGHT DISTRIBUTION

Roadway Width	Mtg. Ht.	OH(+) SB(−)	Spacing	HPS Watts	Luminaire Arrangement	Minimum Acceptable Illuminance Levels	
						*Avg. Fc.	**Avg./Min UR
12'	30'	−4'	150'	150	One Side	0.7	2.0:1
24'	30'	−4'	120'	150	One Side	0.7	1.9:1
36'	30'	+1'	120'	150	One Side	0.6	2.3:1
36'	30'	+1'	155'	200	One Side	0.7	2.6:1
36'	40'	+1'	210'	310	One Side	0.7	2.4:1
48'	30'	+1'	140'	250	One Side	0.8	3.5:1
48'	40'	+1'	200'	310	One Side	0.7	2.7:1
60'	40'	+1'	180'	310	One Side	0.7	3.1:1
72'	40'	+1'	120'	310	Stagger	0.9	2.7:1
84'	40'	+1'	110'	310	Stagger	0.8	2.5:1
100'	40'	+1'	100'	400	Opposite	2.1	2.0:1

ANSI/IES TYPE III LIGHT DISTRIBUTION

Roadway Width	Mtg. Ht.	OH(+) SB(−)	Spacing	HPS Watts	Luminaire Arrangement	Minimum Acceptable Illuminance Levels	
						*Avg. Fc.	**Avg./Min UR
12'	30'	−4'	150'	150	One Side	0.6	4.6:1
24'	30'	−4'	120'	150	One Side	0.7	2.6:1
36'	30'	+1'	120'	150	One Side	0.7	2.8:1
36'	30'	+1'	155'	200	One Side	0.7	4.7:1
36'	40'	+1'	210'	310	One Side	0.7	5.5:1
48'	30'	+1'	140'	250	One Side	0.9	3.7:1
48'	40'	+1'	200'	310	One Side	0.7	4.4:1
60'	40'	+1'	180'	310	One Side	0.7	3.0:1
72'	40'	+1'	120'	310	Stagger	0.9	4.3:1
84'	40'	+1'	110'	310	Stagger	0.9	5.6:1
100'	40'	+1'	100'	400	Opposite	2.3	4.3:1

(*) Minimum Average Maintained Footcandle Value based on 62% combined maintenance factor.
(**) Maximum Uniformity Ratio based on Average/Minimum Maintained Footcandle Values.

NOTES:

1. Standard Drawing No's.E–12, E–13, E–14, E–15 shall be used mutually for all cutoff luminaire applications.
2. Photometrics for various cutoff luminaire types are based on 30ft. mounting height for use with the following High Pressure Sodium lamp wattages:
   Type A & SA: 50W. thru 150W. Type SC: 200W.
   Type B & SB: 50W. thru 150W. Type D: 200W. thru 400W.
   Type C: 200W. thru 400W. Type SD: 200W.
3. All photometric data shall be used in conjunction with the "Criteria for Illuminance Levels" table shown. This table shall be the governing criteria for evaluation of other manufacturers to be used.
4. Isofootcandle curves are based on 30ft. mounting height. For other mounting heights, the following correction factor shall be used $(30/\text{Actual MH})^2$
5. The tables shown for ANSI/IES Type II & III Light Distribution provide information for various roadway applications and shall be the governing "Criteria for Illuminance Levels" for use in conjuction with appropriate photometric data. The Minimum Acceptable Illuminance Levels (Values) are based on American Electric Photometric curves shown above.
6. For luminaire description, see Standard Specification (1996). For manufacturer's catalogue number, see Design Manual "Roadway Lighting Section 19" Appendix. For application of photometric curve other than the one shown and specified in catalogue numbers, contact the General Consultant for approval.

0 ½ 1 2 3 4
ORIGINAL SIZE IN INCHES

APP.	NO.	DATE	REVISION
	1	2-98	REVISED NOTE 1
		12/96	ORIGINAL DRAWING

NEW JERSEY TURNPIKE AUTHORITY
NEW JERSEY TURNPIKE

CUTOFF LUMINAIRE PHOTOMETRICS – I

HOWARD NEEDLES TAMMEN & BERGENDOFF
330 Passaic Ave., Fairfield, New Jersey
JOHN M. ORMAN
N.J.P.E. Licencse No. GE 39691

STANDARD DRAWING E–12

CONTRACT NO. SHEET NO. OF