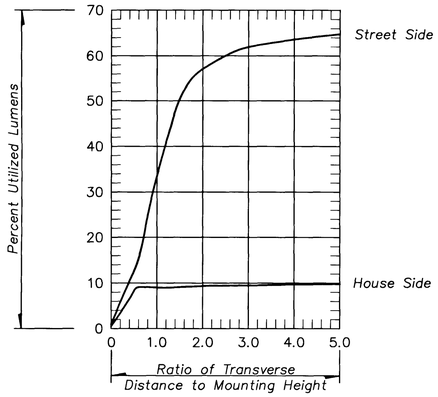

UTILIZATION CURVE (45° TILT)

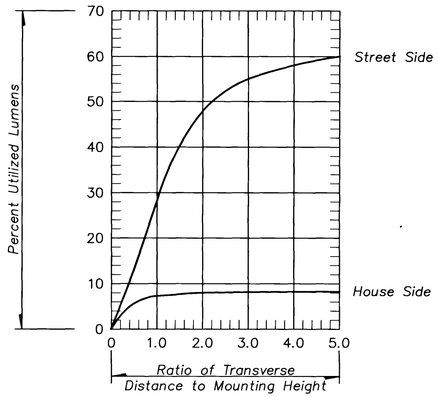

UTILIZATION CURVE (45° TILT)

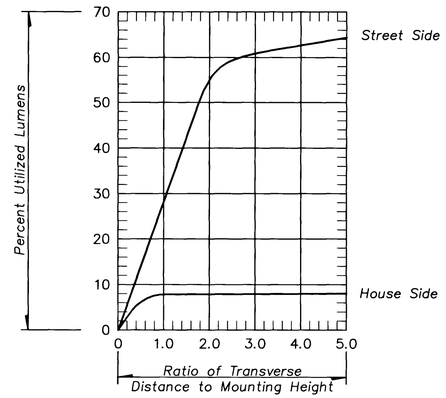

UTILIZATION CURVE (45° TILT)

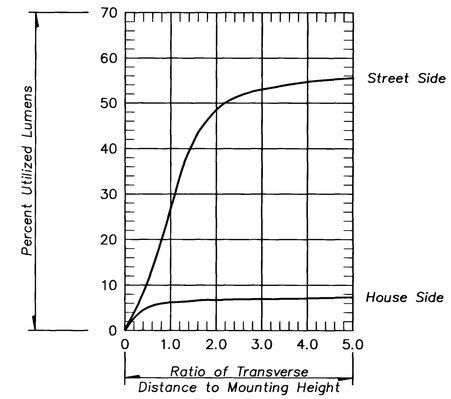

UTILIZATION CURVE (45° TILT)

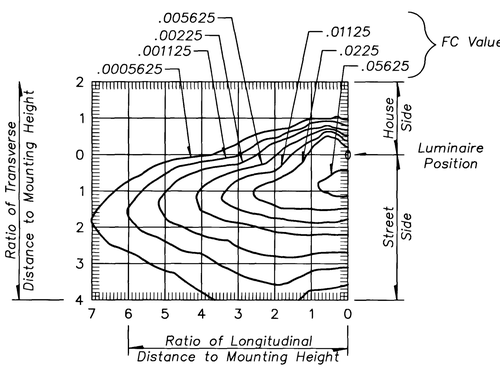

ISOFOOTCANDLE CURVE (45° TILT)

(American Electric Co. #P2213M)

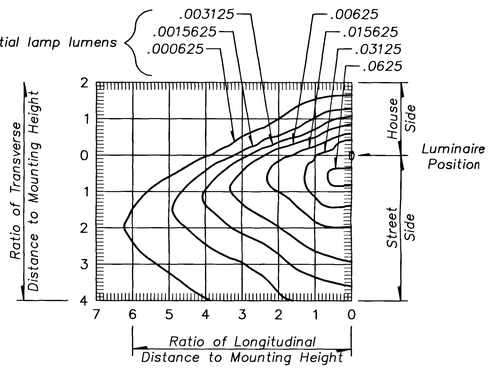

ISOFOOTCANDLE CURVE (45° TILT)

(Cooper Lighting Co. #766749)

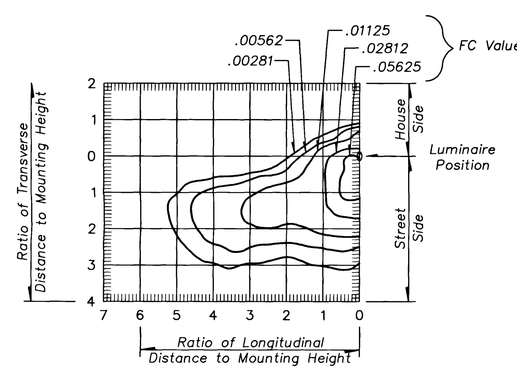

ISOFOOTCANDLE CURVE (45° TILT)

(General Electric Co. #177863-01)

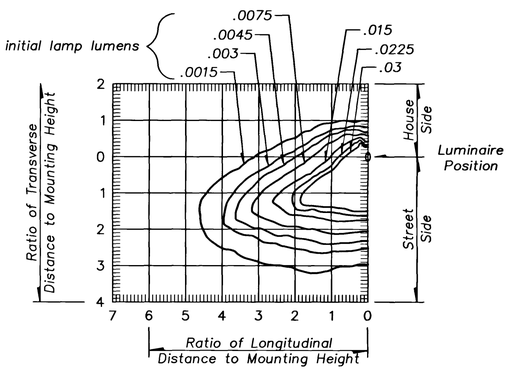

ISOFOOTCANDLE CURVE (45° TILT)

(Holophane Lighting #29036)

OFFSET LUMINAIRE
ANSI/IES TYPE III LIGHT DISTRIBUTION

(See Note 3)

	Roadway Width	Mtg. Ht.	SB(−)	Spacing	HPS Watts	Luminaire Arrangement	Tilt	American Electric #P2213M		Cooper Lighting #766749		General Electric #7863-01		Holophane #29036	
								Avg. Fc.	Avg./Min UR	Avg. Fc.	Avg./Min UR	Avg. Fc.	Avg./Min UR	Avg. Fc.	Avg./Min UR
Roadway	48'	40'	−20	200'	400	One Side	45°	1.8	2.14	1.34	2.6	1.22	3	1.17	2.9
Roadway	60'	40'	−20	200'	400	One Side	45°	1.6	3.04	1.2	3.0	1.09	2.7	1.01	3.3
Roadway	72'	40'	−20	150'	400	One Side	50°	1.7	3.1	1.39	2.6	1.25	2.5	1.17	3.2
Roadway	84'	40'	−20	150'	400	One Side	55°	1.4	3.0	1.21	2.6	1.01	2.6	0.98	2.6
Toll Plaza	100'	40'	−20	150'	400	One Side	60°	1.1	3.3	1.02	2.7	0.83	2.5	0.82	2.5
Toll Plaza	120'	40'	−20	110'	400	Opposite	60°	2.2	1.5	2.43	1.6	2.04	1.6	1.97	1.7
Toll Plaza	150'	40'	−20	100'	400	Opposite	60°	1.9	1.2	2.24	1.5	1.98	1.6	1.85	1.6
Toll Plaza	180'	40'	−20	90'	400	Opposite	55°	1.8	2.6	2.23	1.3	2.11	1.4	1.82	1.2
Toll Plaza	200'	40'	−20	90	400	Opposite	55°	1.6	3.0	2.04	2.0	1.93	1.4	1.65	1.1

NOTES:

1. Photometrics for various offset luminaire types are based on 40' mounting height for use with 400 watt high pressure sodium lamp. For other mounting heights, the following correction factor shall be used $(40/\text{actual MH})^2$.
2. All photometric data shall be used in conjunction with the "Criteria For Illuminance Levels" table shown. This table shall be the governing criteria for evaluation of other manufacturers to be used.
3. The table shown for ANSI/IES Type III Light Distribution provide information for various roadway and toll plaza applications and shall be the governing "Criteria For Illuminance Levels" for use in conjunction with appropriate photometric data. Any variation of the parameter shown in the table due to special roadway lighting application must be approved by the consultant. The Minimum Acceptable Illuminance Levels (Values) are based on the Holophane Lighting photometric curves above.
4. For luminaire description, see Standard Specification (1996). For manufacturer's catalogue number, see Design Manual "Roadway Lighting Section 19" Appendix. For application of photometric curve other than the one shown and specified in catalogue numbers, contact the General Consultant for approval.

0 ½ 1 2 3 4
ORIGINAL SIZE IN INCHES

APP.	NO.	DATE	REVISION
		12/96	ORIGINAL DRAWING

NEW JERSEY TURNPIKE AUTHORITY
NEW JERSEY TURNPIKE

OFFSET LUMINAIRE PHOTOMETRICS

HOWARD NEEDLES TAMMEN & BERGENDOFF
330 Passaic Ave., Fairfield, New Jersey
JOHN M. ORMAN
N.J.P.E. Licencse No. GE 39691

STANDARD DRAWING E-16

CONTRACT NO. SHEET NO. OF