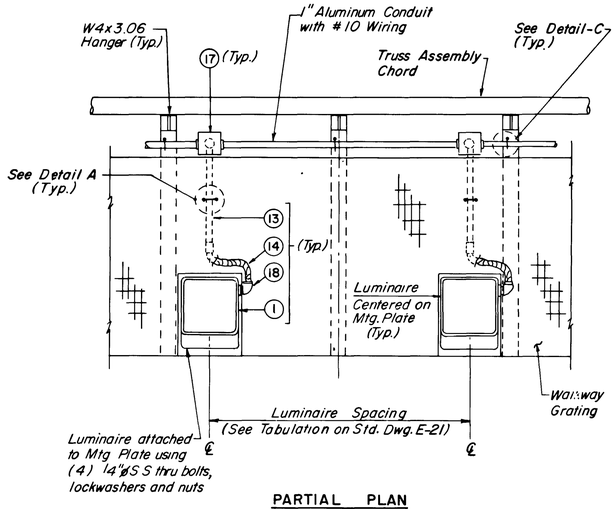


PARTIAL PLAN

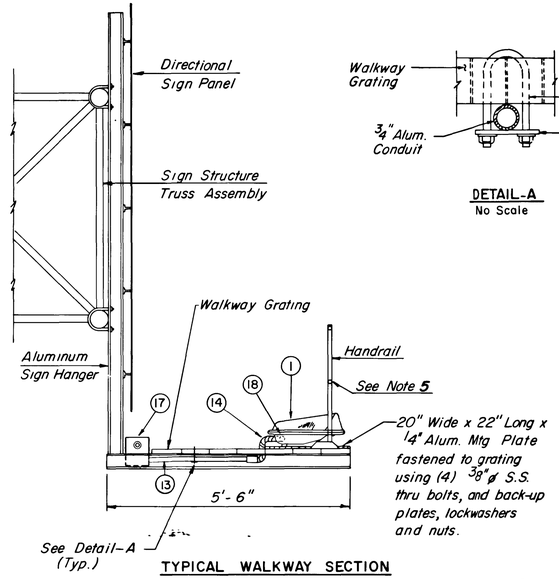


TYPICAL WALKWAY SECTION

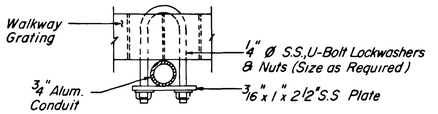


DETAIL-A
No Scale

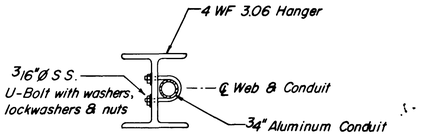


DETAIL - B
3" = 1'-0"

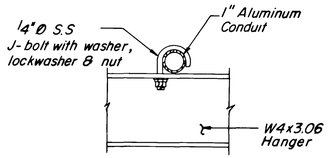


DETAIL-C
3" = 1'-0"

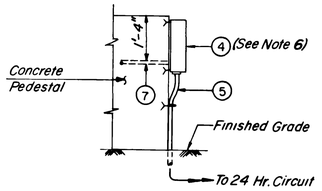


DETAIL-D
No Scale

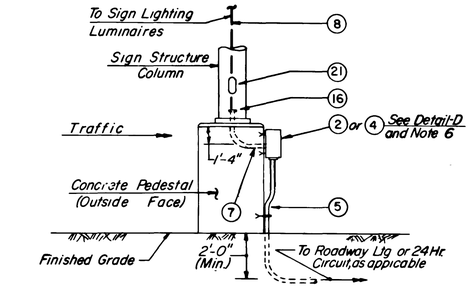


BUTTERFLY AND CANTILEVER PEDESTAL

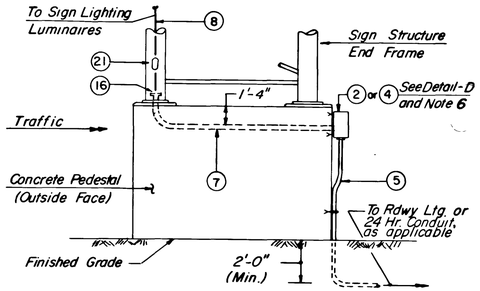


SPAN TYPE PEDESTAL

## SERVICE EQUIPMENT INSTALLATION DETAILS AT SIGN STRUCTURE PEDESTALS

1/4" = 1'-0"

## LUMINAIRE INSTALLATION DETAILS FOR OVERHEAD SPAN SIGN STRUCTURES

No Scale

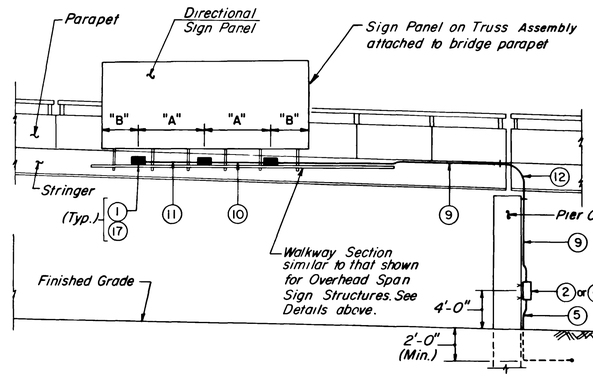


TYPICAL BRIDGE MOUNTED OVERHEAD SIGN

No Scale
(See Note 6)

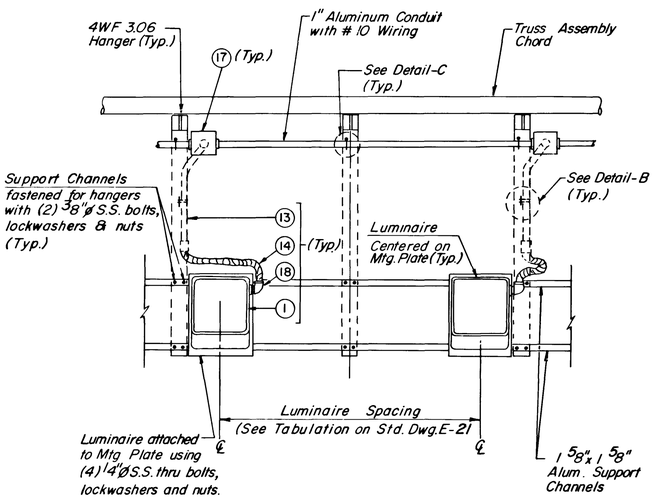


PARTIAL PLAN

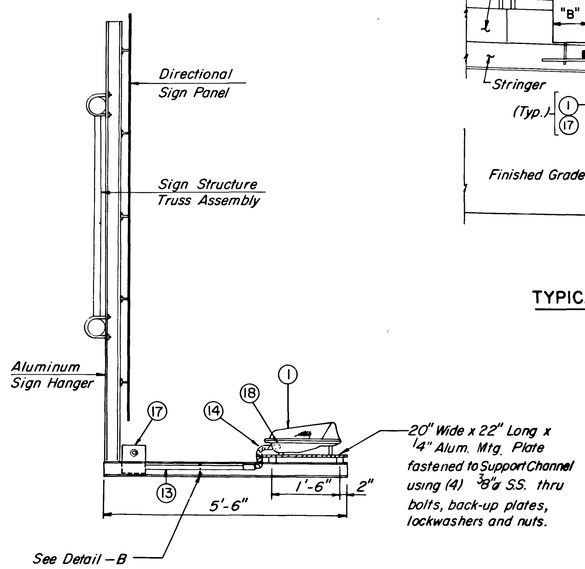


TYPICAL SECTION

## LUMINAIRE INSTALLATION DETAILS FOR CANTILEVER AND BUTTERFLY SIGN STRUCTURES

No Scale

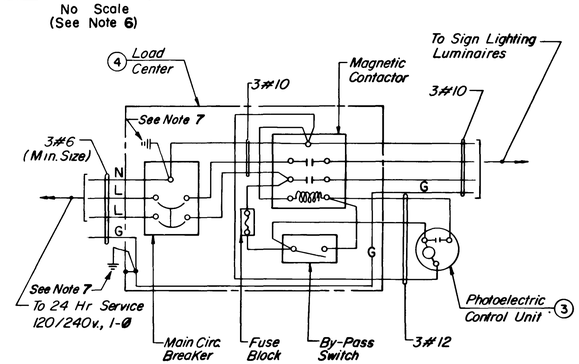


LOAD CENTER WIRING DIAGRAM FOR 24 HR. CIRCUITS

No Scale
(See Note 6)

0 1/2 1 2 3 4

ORIGINAL SIZE IN INCHES

**NOTES:**

1. FOR WIRE SPLICING AT SIGN STRUCTURES, USE 'TWISTER DB PLUS MODEL #60' WET LOCATION WIRE CONNECTOR.
2. FOR LEGEND AND ADDITIONAL NOTES, SEE STANDARD DRAWING E-21. STANDARD DRAWING No's. E-21 AND E-22 SHALL BE USED JOINTLY FOR ALL DIRECTIONAL SIGN LIGHTING APPLICATIONS.
3. ALL ATTACHMENT HARDWARE SHALL BE STAINLESS STEEL.
4. THE ENCLOSED CIRCUIT BREAKER OR LOAD CENTER MAY BE ATTACHED TO AN ABUTMENT WALL IN A SIMILAR FASHION WHERE PIERS ARE NOT UTILIZED.
5. THE LOWER HANDRAIL ELEMENT SHALL BE ADJUSTED TO CLEAR THE LUMINAIRE ASSEMBLY IN THE LOWERED POSITION.
6. ENCLOSED CIRCUIT BREAKER ARRANGEMENT SHALL BE UTILIZED WITH ALL GROUP CONTROLLED ROADWAY LIGHTING CIRCUITS. LOAD CENTER WITH PHOTOELECTRIC CONTROL ARRANGEMENT SHALL BE UTILIZED WITH ALL 24 HR. NON-GROUP CONTROLLED CIRCUITS. VOLTAGE CHARACTERISTICS AND/OR TYPE OF SERVICE SHALL BE COORDINATED WITH THE LOCAL AVAILABLE UTILITY OR CIRCUIT TO BE UTILIZED.
7. NEUTRAL SHALL BE GROUNDED ONLY WHEN USED IN A SERVICE ENTRANCE LOAD CENTER, PROVIDE 3/4" x 10'-0" MIN. GROUND ROD (PROVIDE ROD/RODS TO SATISFY UTILITY SERVICE ENTRANCE REQUIREMENTS)
8. GROUNDING FOR ALL SIGN STRUCTURES SHALL BE ACCOMPLISHED BY EXTENDING A GROUND WIRE IN THE ELECTRICAL SERVICE CONDUIT FROM THE GROUND ROD IN THE ADJACENT JUNCTION BOX TO THE GROUNDING STUD WITHIN THE SIGN STRUCTURE END FRAME COLUMN HANDHOLE.

| APP. | NO. | DATE | REVISION |
|---|---|---|---|
| | | 12/96 | REISSUED |

NEW JERSEY TURNPIKE AUTHORITY

NEW JERSEY TURNPIKE

SIGN LIGHTING DETAILS - II

HOWARD NEEDLES TAMMEN & BERGENDOFF
330 Passaic Ave., Fairfield, New Jersey
JOHN M. ORMAN
N.J.P.E. License No. GE 39691

STANDARD DRAWING E-22

CONTRACT NO. SHEET NO. OF