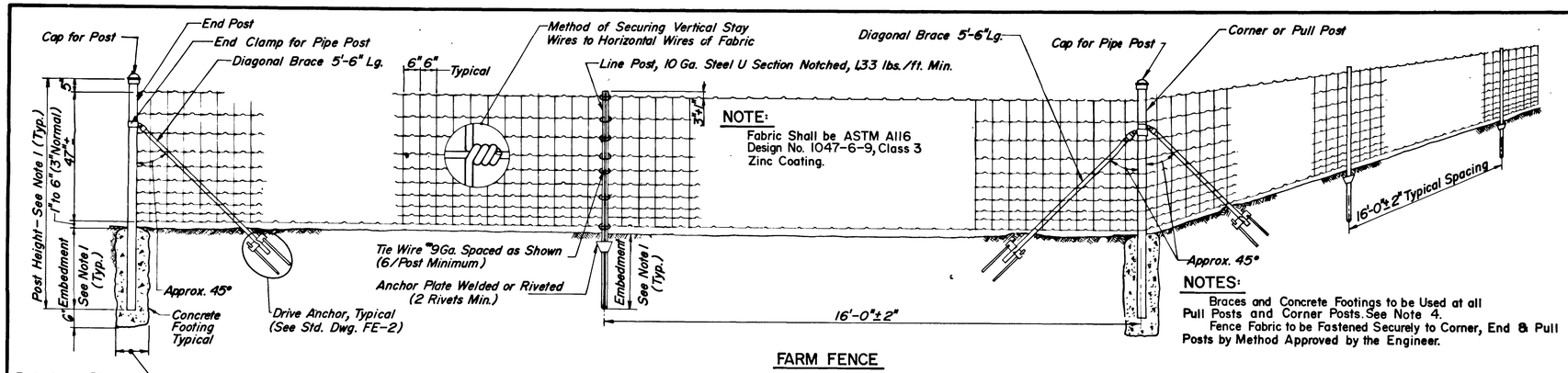

NOTE:
Fabric Shall be ASTM A116 Design No. 1047-6-9, Class 3 Zinc Coating.

NOTES:
Braces and Concrete Footings to be Used at all Pull Posts and Corner Posts. See Note 4.
Fence Fabric to be Fastened Securely to Corner, End & Pull Posts by Method Approved by the Engineer.

FARM FENCE

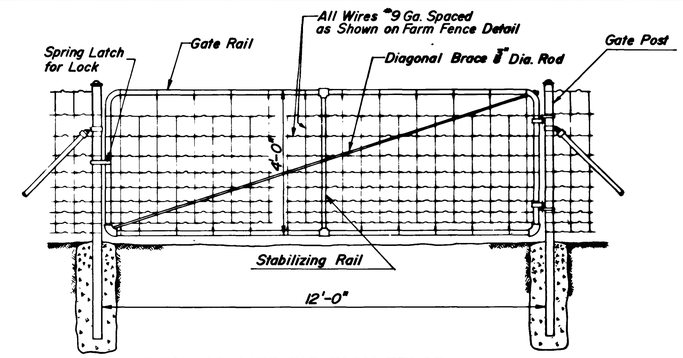

VEHICULAR GATE FOR FARM FENCE

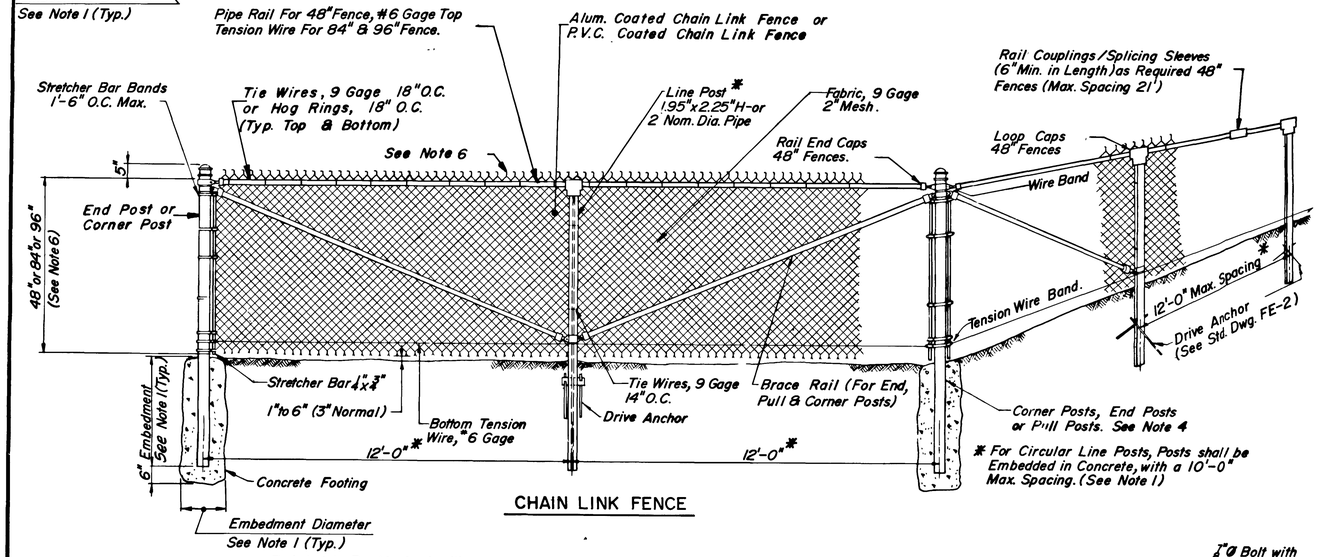

* For Circular Line Posts, Posts shall be Embedded in Concrete, with a 10'-0" Max. Spacing. (See Note 1)

CHAIN LINK FENCE

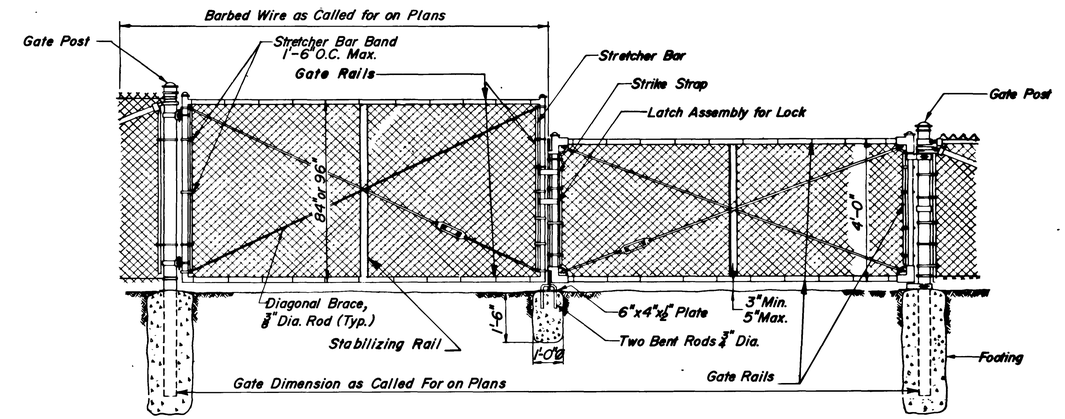

NOTE:
Single Gate 12 Feet Wide, Unless Noted on Plans.

VEHICULAR GATE FOR CHAIN LINK FENCE

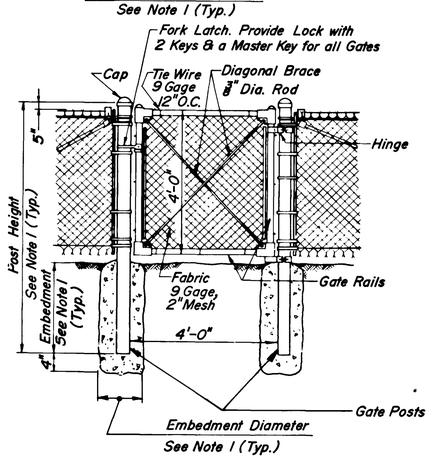

PEDESTRIAN GATE FOR CHAIN LINK FENCE

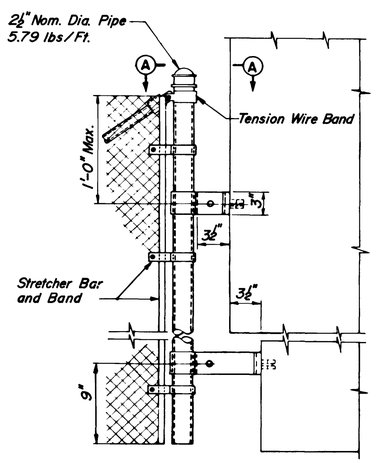

ABUTMENT CONNECTION

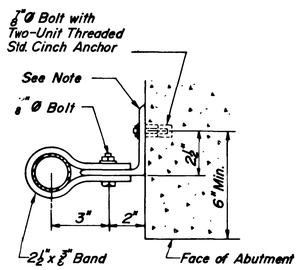

SECTION A-A

NOTE:
All Top Conn. Angles to be L 4" x 3 1/2" x 5/16" if Top Conn. Occurs Below Wingwall Rustications, Bottom Conn. Angle Shall also be L 4" x 3 1/2" x 5/16". If Top Conn. Occurs Above Rustications, Bottom Conn. Angle Shall be L 7" x 4" x 3/8".

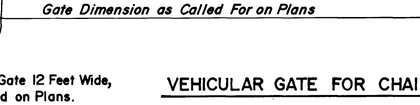

TYPICAL FENCE SECTION AT R.O.W. LINE
(See Note 3)

NOTES:

1. FOR POST AND RAIL SIZES AND FOR EMBEDMENT DIMENSIONS, SEE STANDARD DRAWING FE-2.
2. FOR MATERIAL, SEE SPECIFICATIONS.
3. BARBED WIRE EXTENSION ARMS ANGLED FROM THE VERTICAL SHALL LEAN AWAY FROM TURNPIKE PROPERTY.
4. PULL POSTS SHALL BE PLACED APPROXIMATELY 500' APART IN STRAIGHT RUNS AND AT EACH VERTICAL CHANGE OF 15° OR MORE. CORNER POSTS SHALL BE PLACED AT EACH HORIZONTAL ANGLE OF 15° OR MORE.
5. FOR ANCHORAGE ASSEMBLIES, SEE STANDARD DRAWING FE-2.
6. TOP AND BOTTOM SELVAGES SHALL BE TWISTED AND BARBED ON 96" & 84" FENCES. ON 48" FENCE THE TOP AND BOTTOM SHALL HAVE A KNUCKLE SELVAGE.

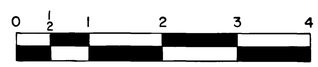

ORIGINAL SIZE IN INCHES

APP.	NO.	DATE	REVISION
	1	1/88	Minor Revisions
		3/87	Reissued; Conforms to 1987 Specs.

NEW JERSEY TURNPIKE AUTHORITY

NEW JERSEY TURNPIKE

CHAIN LINK FENCE AND FARM FENCE DETAILS

OFFICE OF THE CHIEF ENGINEER
NEW BRUNSWICK NEW JERSEY

1987 STANDARD DRAWING FE-1

CONTRACT NO. SHEET NO. OF