POST SCHEDULE

POST TYPE	FENCE TYPE	POST HEIGHT	EMBEDMENT LENGTH	EMBEDMENT DIAMETER	DIAMETER (Inches) NOMINAL	DIAMETER (Inches) ACTUAL O.D.	WEIGHT (LB./FT.)	ANSI SCHEDULE
VEHICULAR GATE	48" C.L.	8'-2"	3'-6"	1'-6"	3 1/2	4.0	9.11	40
	84" C.L.	12'-2"	4'-6"	1'-6"	3 1/2	4.0	9.11	40
	96" C.L.	13'-2"	4'-6"	1'-6"	3 1/2	4.0	9.11	40
	FARM	8'-1"	3'-6"	1'-6"	2	2.375	3.65	40
PEDESTRIAN GATE	48" C.L.	7'-8"	3'-0"	1'-2"	2	2.375	3.65	40
	84" C.L.	11'-2"	3'-6"	1'-2"	3 1/2	4.0	9.11	40
	96" C.L.	12'-2"	3'-6"	1'-2"	3 1/2	4.0	9.11	40
	FARM	–	–	–	–	–	–	–
CORNER, END OR PULL	48" C.L.	7'-8"	3'-0"	1'-2"	2	2.375	3.65	40
	84" C.L.	11'-2"	3'-6"	1'-2"	3 1/2	4.0	9.11	40
	96" C.L.	12'-2"	3'-6"	1'-2"	3 1/2	4.0	9.11	40
	FARM	7'-9"	2'-6"	1'-0"	2	2.375	3.65	40
LINE (CIRCULAR)	48" C.L.	6'-8"	2'-8"	1'-0"	2	2.375	3.65	40
	84" C.L.	10'-6"	3'-6"	1'-0"	2	2.375	3.65	40
	96" C.L.	11'-6"	3'-6"	1'-0"	2	2.375	3.65	40
	FARM	–	–	–	–	–	–	–
LINE (1.95" x 2.25"H)	48" C.L.	6'-8"	2'-8"	–	–	–	4.10	–
	84" C.L.	10'-6"	3'-6"	–	–	–	4.10	–
	96" C.L.	11'-6"	3'-6"	–	–	–	4.10	–
LINE (STANDARD U)	FARM	6'-11"	2'-6"	–	–	–	1.33	–

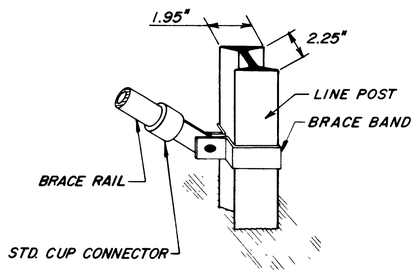

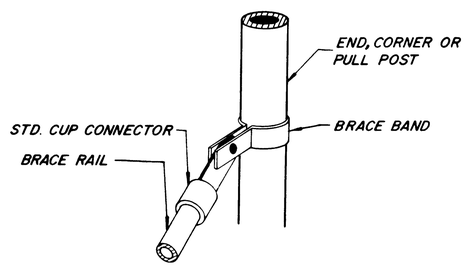

DETAIL OF BRACE CONNECTION

RAIL SCHEDULE

RAIL TYPE	FENCE TYPE	DIAMETER (Inches) NOMINAL	DIAMETER (Inches) ACTUAL O.D.	WEIGHT (LB./FT.)	ANSI SCHEDULE
VEHICULAR GATE	CHAIN LINK	2	2.375	3.65	40
	FARM	1	1.315	1.68	40
PEDESTRIAN GATE	CHAIN LINK	1 1/2	1.9	2.72	40
	FARM	–	–	–	–
STABILIZING (GATE)	CHAIN LINK	1 1/2	1.9	2.72	40
	FARM	1	1.315	1.68	40
BRACE	CHAIN LINK	1 1/4	1.66	2.27	40
	FARM	1 1/4	1.66	2.27	40
TOP	48" C.L.	1 1/2	1.9	2.72	40

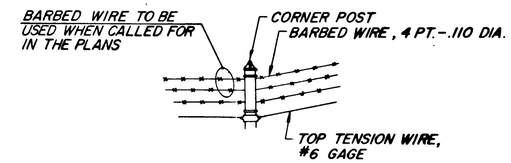

BARBED WIRE DETAIL

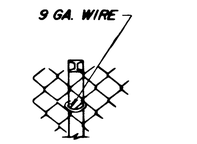

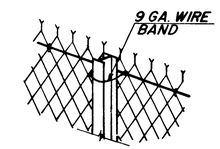

FABRIC ATTACHMENT DETAILS

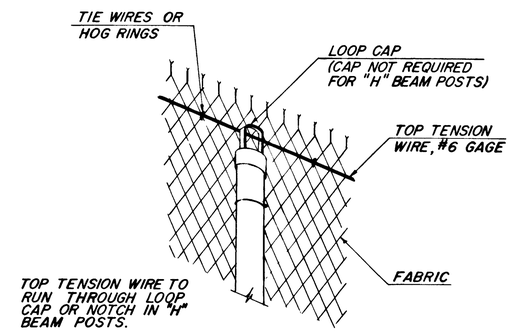

TOP TENSION WIRE AT LINE POSTS
(Typical for 84" and 96" High Chain Link Fence)

NOTES:

1. Drive anchor clamp is also adaptable for use with tubular brace rail on the farm fence.
2. The letter designation used in symbol for fence are as follows:
   F - Farm Fence
   A - Aluminum Coated Chain Link
   B - Barbed Wire topped Fence
   P - PVC Coated Chain Link
   T - Temporary Fence
   The numerical value used indicates the height of fabric in inches.

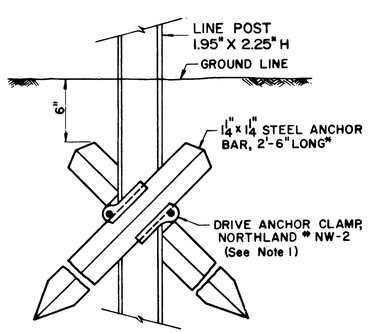

DRIVE ANCHOR DETAIL

*ANCHOR BARS to be normal to the line of the fence.

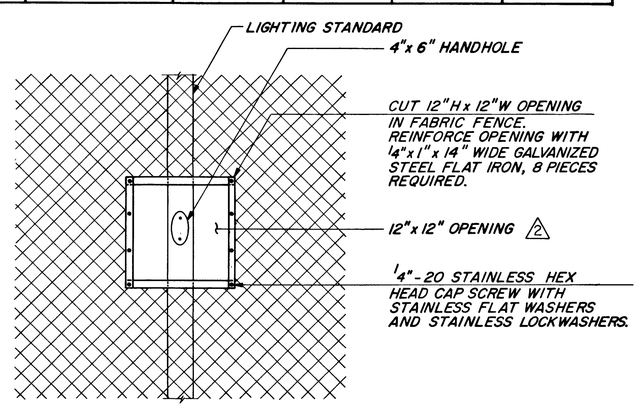

FABRIC FENCE REINFORCEMENT AT HANDHOLES OF LTG. STANDARDS

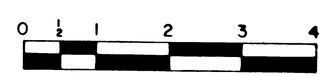

ORIGINAL SIZE IN INCHES

APP.	NO	DATE	REVISION
	2	12/96	Added Opening in Fabric Fence
	1	3/88	Added Top Tension Wire Details, Minor Revisions
		3/87	Reissued; Conforms to 1987 Specs.

NEW JERSEY TURNPIKE AUTHORITY
NEW JERSEY TURNPIKE

CHAIN LINK FENCE AND FARM FENCE DETAILS

OFFICE OF THE CHIEF ENGINEER
NEW BRUNSWICK NEW JERSEY

1987 STANDARD DRAWING FE-2

CONTRACT NO. SHEET NO. OF