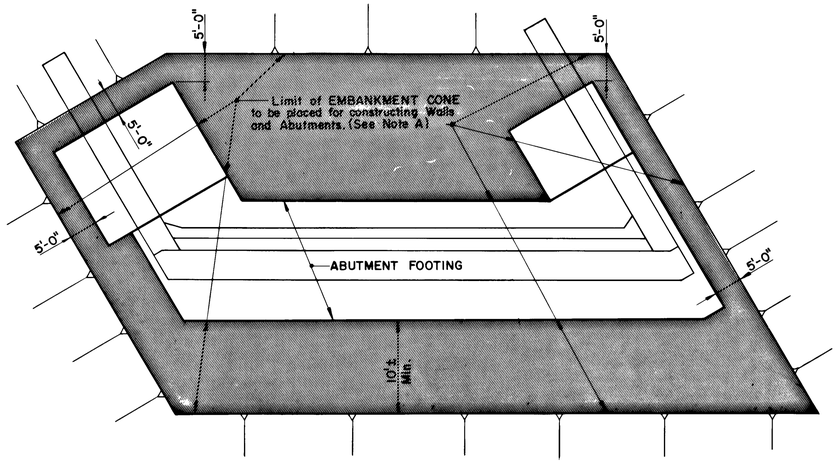

PLAN
No Scale

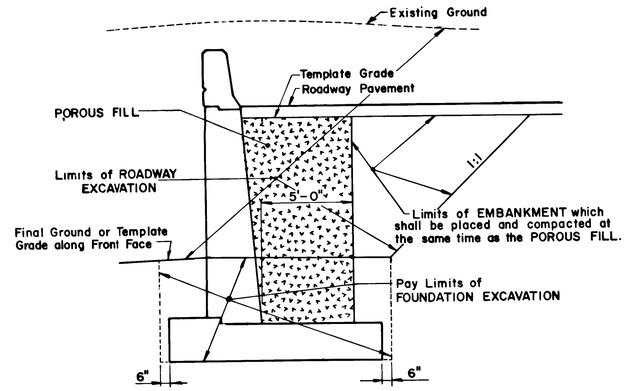

UPPER ROADWAY IN CUT
No Scale

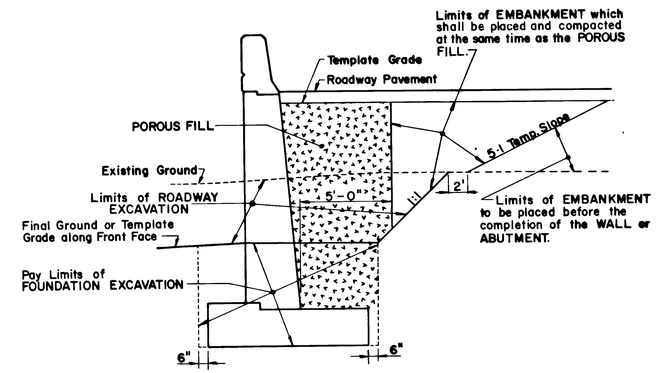

UPPER ROADWAY IN FILL
No Scale

EXISTING GROUND ABOVE FINAL GROUND ALONG FRONT FACE

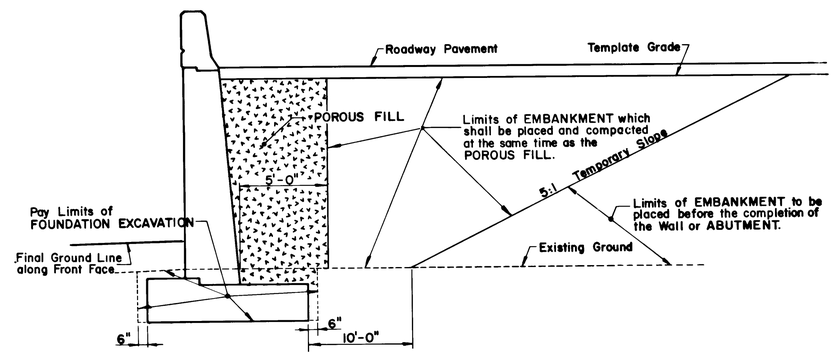

UPPER ROADWAY IN FILL
No Scale

EXISTING GROUND AT OR BELOW FINAL GROUND ALONG FRONT FACE

ABUTMENTS AND WALLS IN CUT

NOTE A:

Where required on the Plans the Embankment Cone shall be constructed of EMBANKMENT GRADE A to be measured and paid for within the Limits shown.

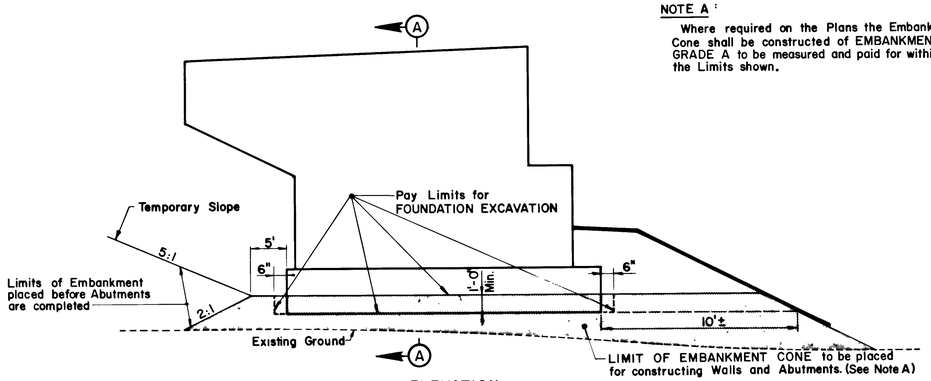

ELEVATION
No Scale

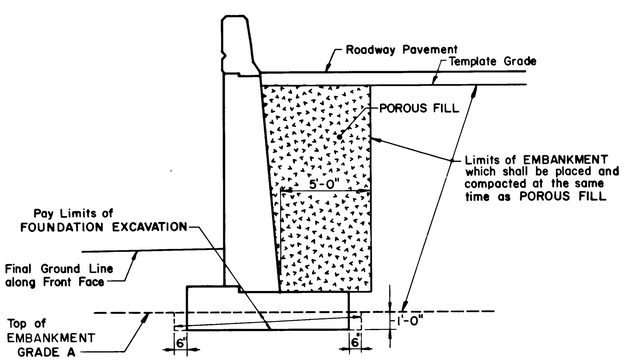

SECTION A-A
No Scale

ABUTMENTS AND WALLS ON FILL

NOTE:

If the Contractor excavates beyond the Limits of FOUNDATION EXCAVATION shown, the over-excavated area is to be backfilled and compacted with POROUS FILL to a minimum of a 5' foot width. POROUS FILL placed in this over-excavated area will not be measured for payment.

0 1/2 1 2 3 4

ORIGINAL SIZE IN INCHES

APP.	NO.	DATE	REVISION
		3/87	Reissued; Conforms to 1987 Specs.

NEW JERSEY TURNPIKE AUTHORITY

NEW JERSEY TURNPIKE

FOUNDATION EXCAVATION AND POROUS FILL

OFFICE OF THE CHIEF ENGINEER
NEW BRUNSWICK NEW JERSEY

1987 STANDARD DRAWING FX-1

CONTRACT NO. SHEET NO. OF