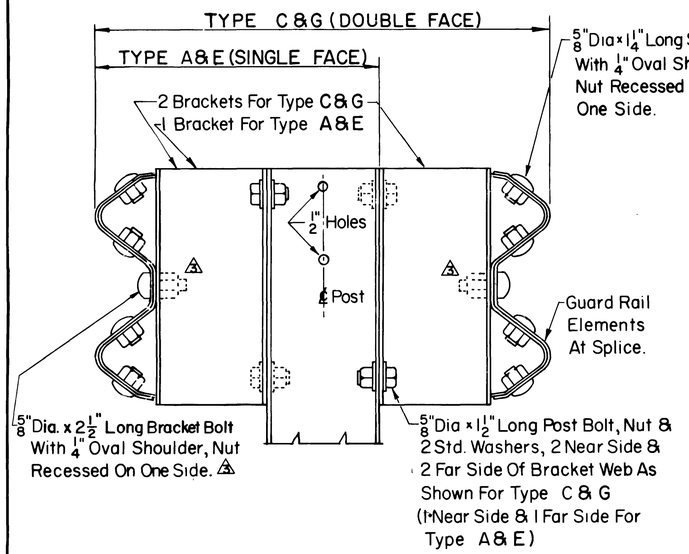

TYPICAL CROSS SECTION

△3 ALTERNATE THRU GUARD RAIL SPLICE

NOTE: BOLTS, NUTS & WASHERS NOT SHOWN IN ELEVATION.

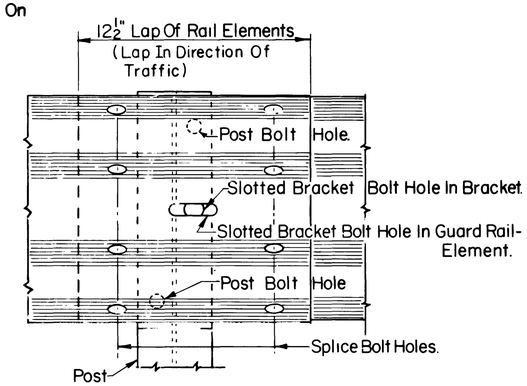

ELEVATION OF GUARD RAIL SPLICE

GUARD RAIL SPLICE DETAILS

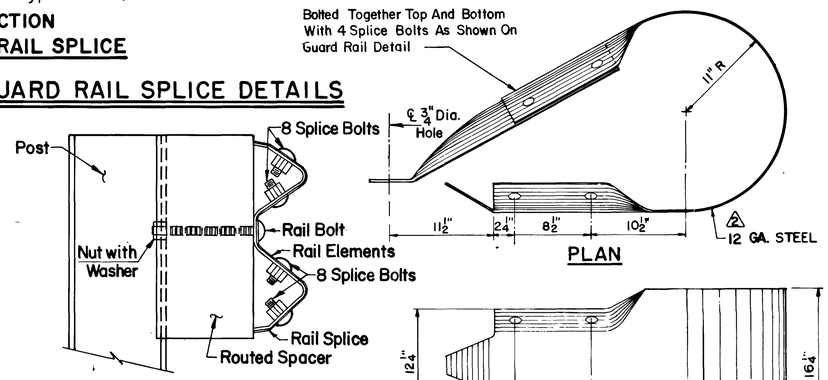

△3 STANDARD GUARD RAIL POST ASSEMBLY

PLAN

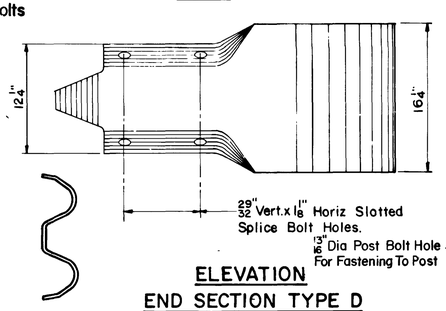

ELEVATION

END SECTION TYPE D

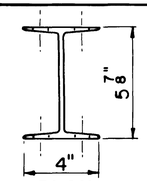

PLAN

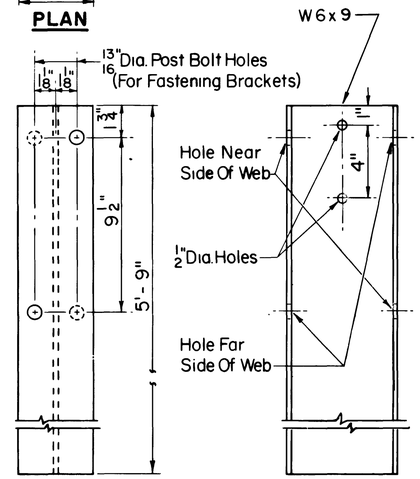

ELEVATION SIDE

△3 ALTERNATE POST

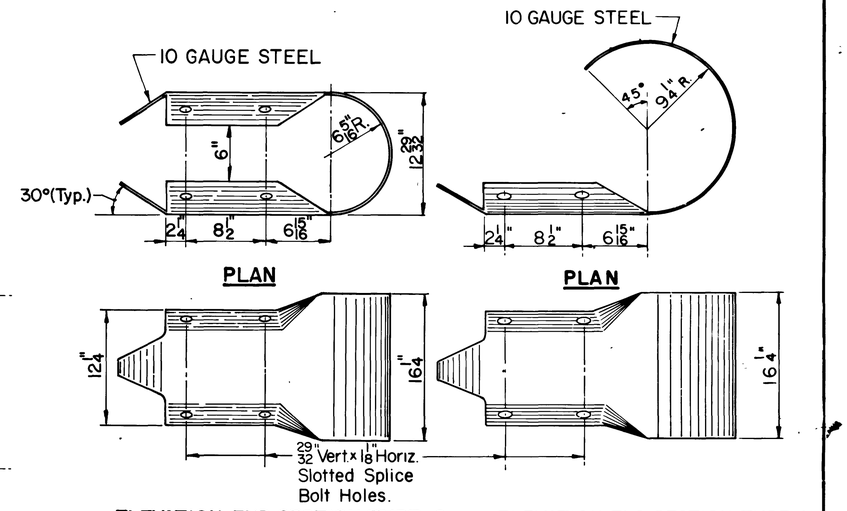

ELEVATION-END SECTION TYPE C ELEVATION-END SECTION TYPE A

END SECTION DETAILS

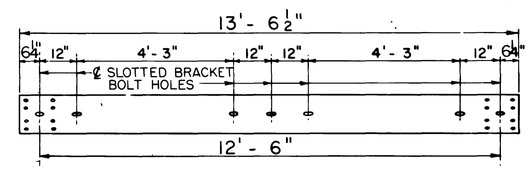

ELEVATION OF GUARD RAIL ELEMENT

(ADDITIONAL SLOTTED HOLES SHALL BE SPACED AS REQUIRED BY POST SPACING)

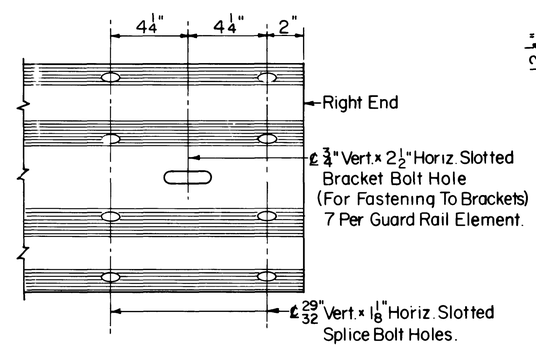

ELEVATION AT END OF GUARD RAIL ELEMENT

(RIGHT END SHOWN-LEFT END SIMILAR)

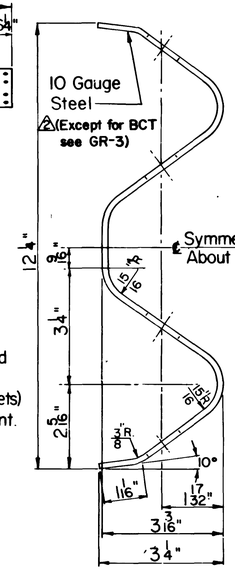

SECTION THRU GUARD RAIL ELEMENT

GUARD RAIL ELEMENT DETAILS

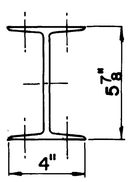

PLAN

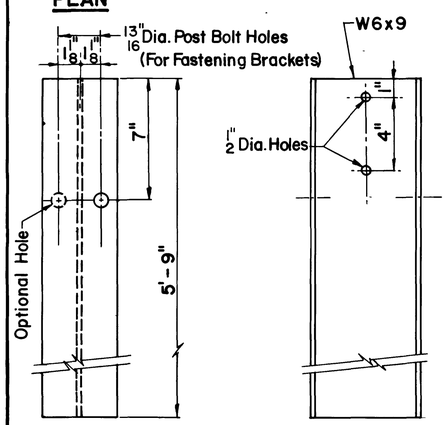

ELEVATION SIDE

△3 STANDARD POST

NOTE: Dimensions shown are for Wood routed spacers. Dimensions for Recycled/Synthetic spacers may vary.

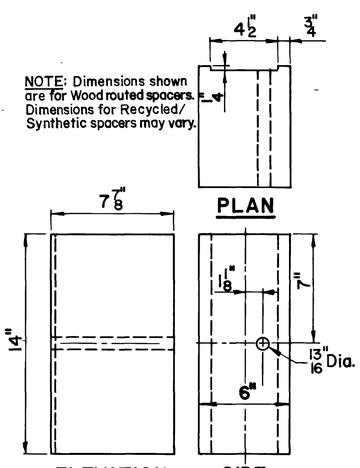

ELEVATION SIDE

△3 STANDARD OFFSET BRACKET

Wood or approved Recycled/Synthetic Materials

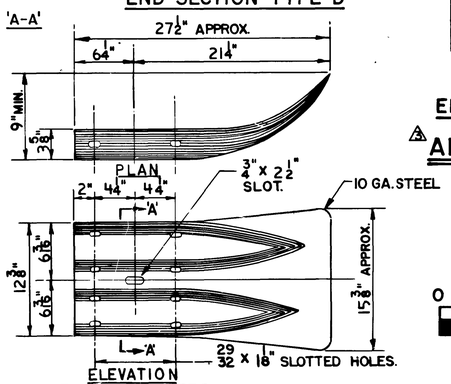

ELEVATION

END SECTION TYPE B

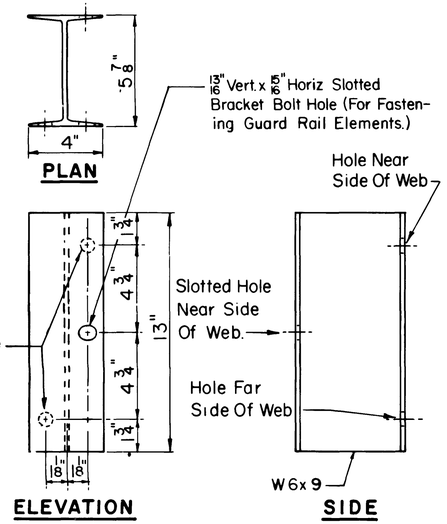

ELEVATION SIDE

△3 ALTERNATE OFFSET BRACKET

Note:

1. W6x9 and W6x8.5 Sections are considered equal for Guard Rail applications; either is acceptable.
2. △3 When directed, Alternate Guardrail Post and Offset Bracket shall be installed.

0 1/2 1 2 3 4

ORIGINAL SIZE IN INCHES

APP.	NO.	DATE	REVISION
	3	3/01	Standard & Alternate Posts & Offset Brackets added and deleted Bracket Washer
	2	3/91	End Section "D" from 10 Ga. to 12 Ga.
	1	7/87	Added note and minor revisions
		3/87	Reissued; Conforms to 1987 Specs.

NEW JERSEY TURNPIKE AUTHORITY

NEW JERSEY TURNPIKE

GUARD RAIL DETAILS

OFFICE OF THE CHIEF ENGINEER NEW BRUNSWICK NEW JERSEY

1987 STANDARD DRAWING GR-1

CONTRACT NO. SHEET NO. OF