BOTTOM BEAM WOOD BLOCKS
1'-2" x 4 1/2"

POST	THICKNESS (T)
1	5"
2	4"
3	3"
4	2"

PLAN
1" = 1'-0"

ELEVATION - TYPE G
1" = 1'-0"

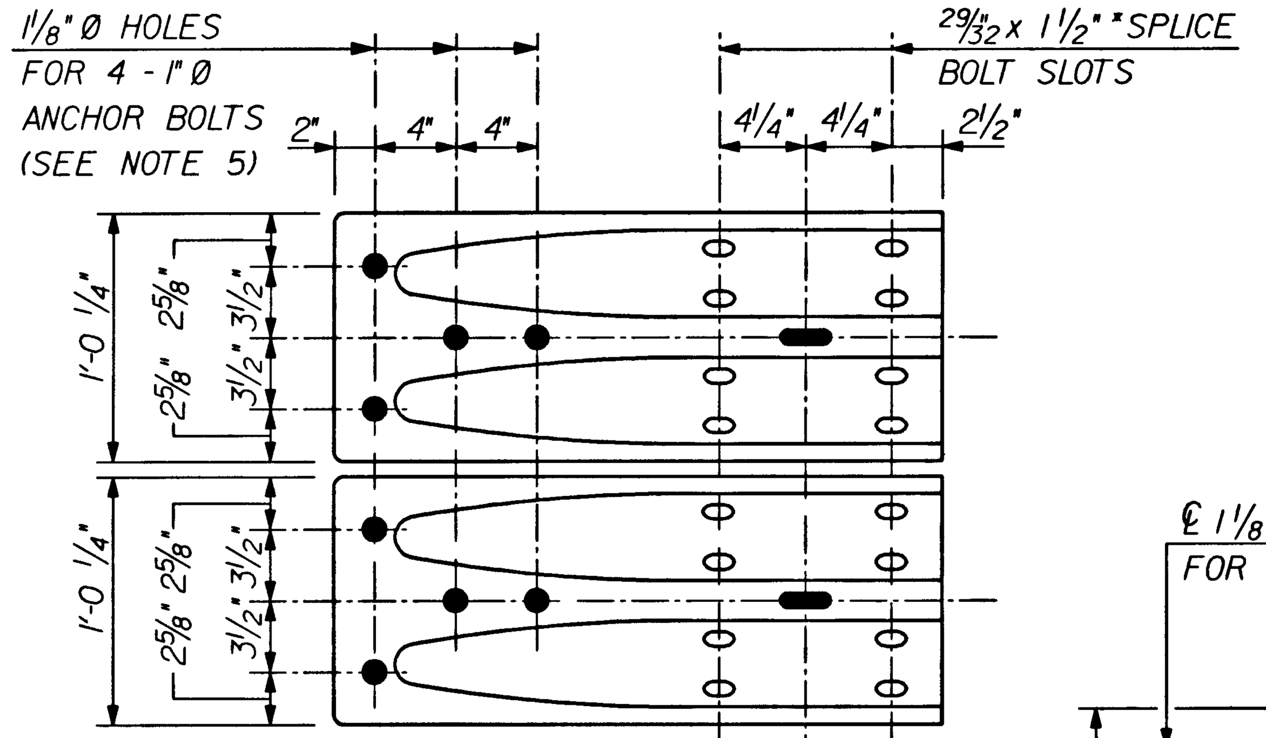

* 2 1/2" OPTIONAL, WITH 2" OD NARROW TYPE A PLAIN WASHER

ELEVATION

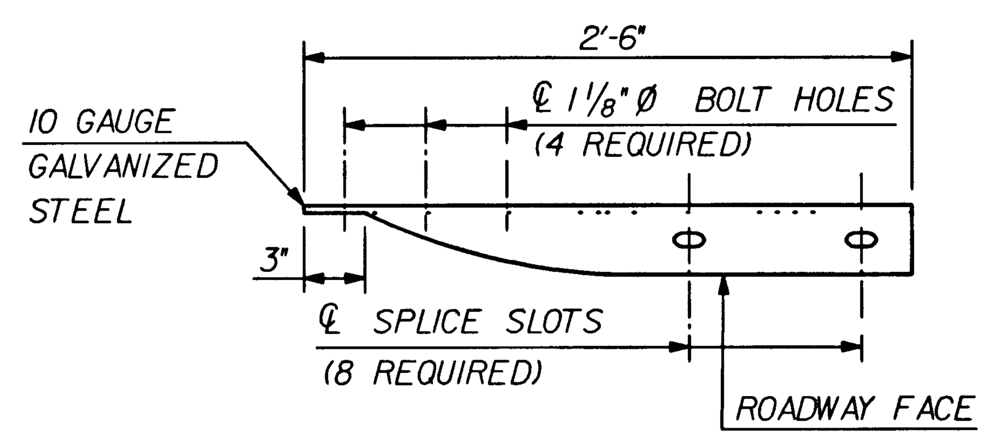

PLAN
TERMINAL CONNECTOR DETAIL
NTS

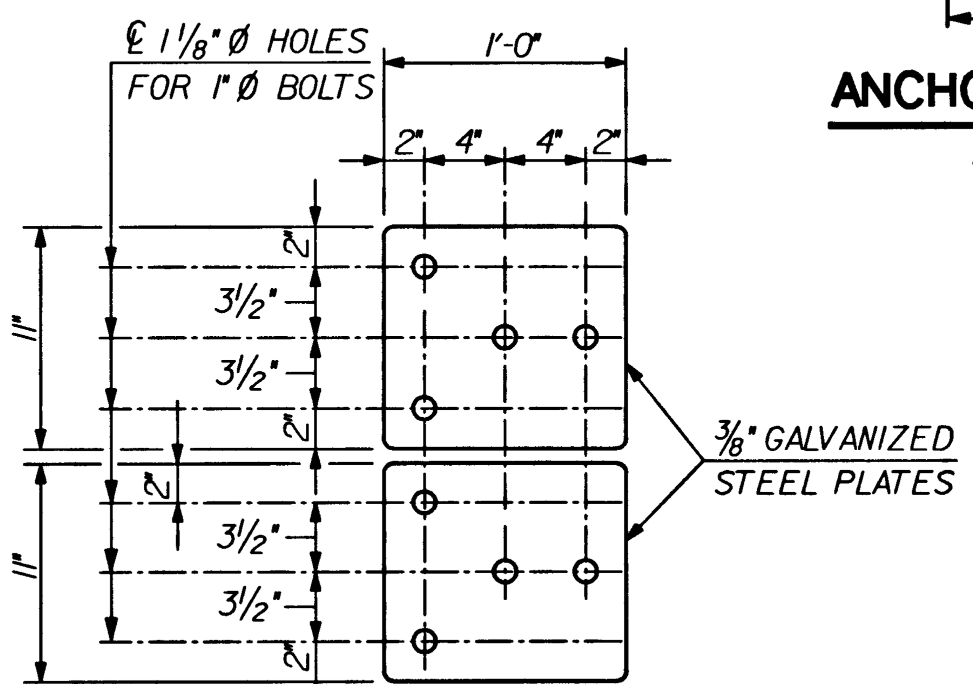

NOTE:
ON NEW CONSTRUCTION, 1 1/8" I.D. HOLES THROUGH CONCRETE PARAPET MAY BE FORMED WITH NON-RIGID SLEEVES, OR CORED THROUGH CONCRETE.

BACKUP PLATE DETAILS
N.T.S.

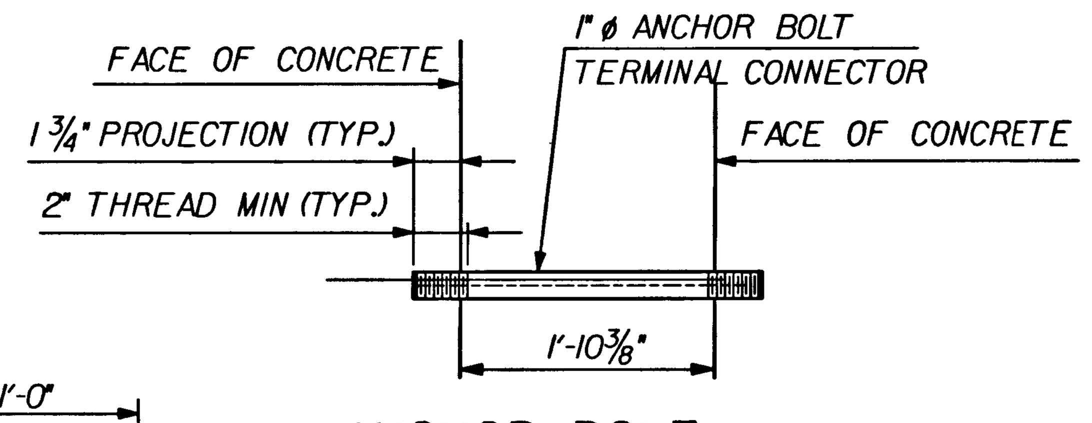

ANCHOR BOLT
N.T.S.

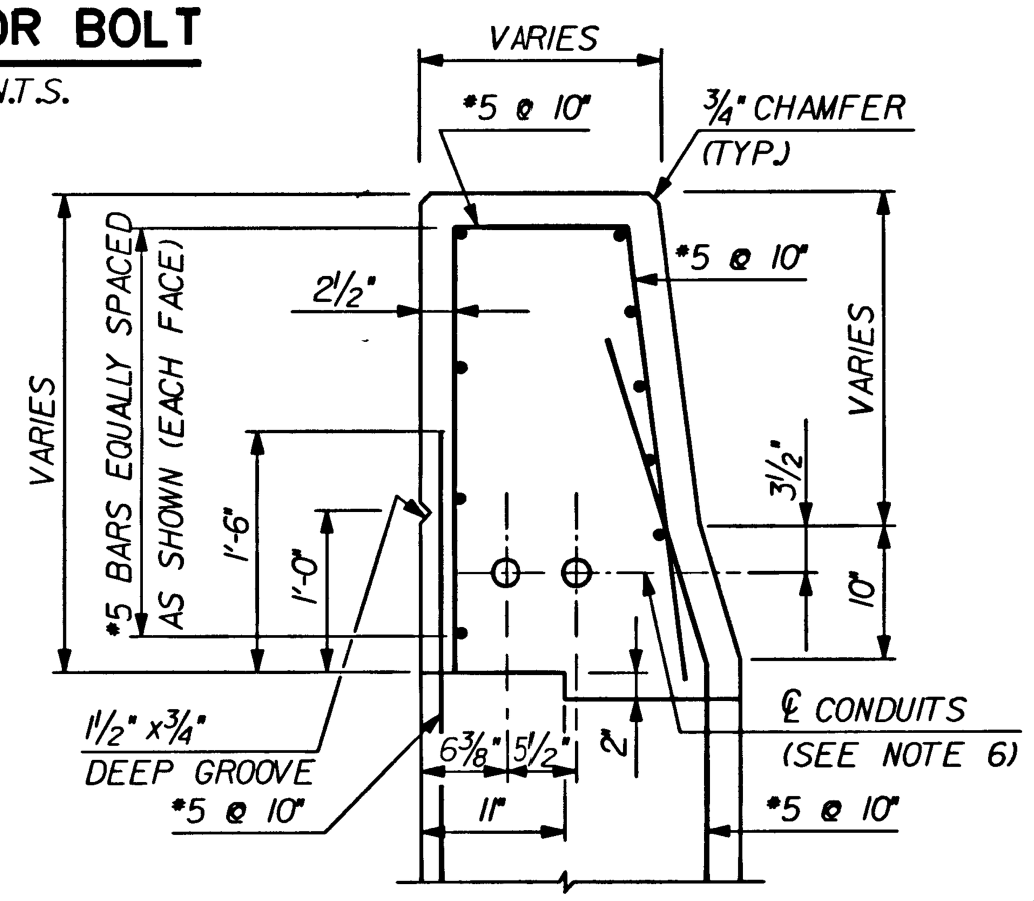

SECTION B-B
1" = 1'-0"

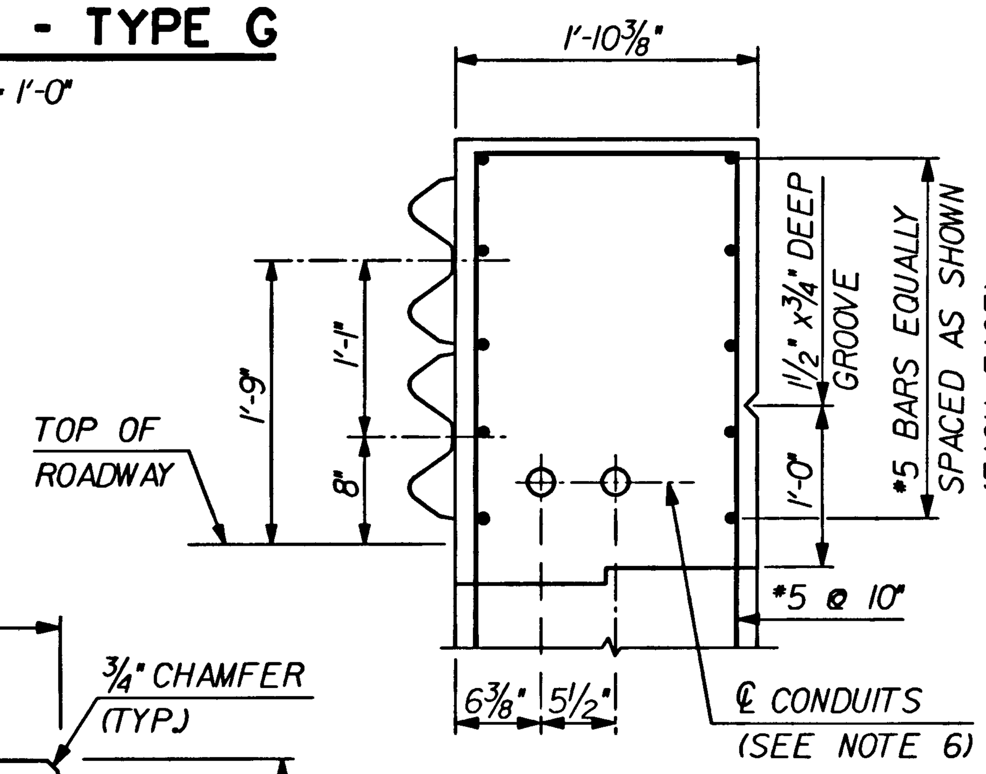

SECTION A-A
1" = 1'-0"

NOTES:

1. BOTTOM BEAM WOOD BLOCKS ARE OFFSET DRILLED TO SIT SQUARELY ON THE POST FLANGE. BLOCKS ARE ATTACHED WITH 5/8" GALVANIZED CARRIAGE BOLTS.
2. THE BOTTOM BEAM MAY BE SHOP BENT IN THE LAST 3 FEET TO FACILITATE INSTALLATION.
3. POSTS (1) - (4) AND (6) REQUIRE AN ADDITIONAL HOLE TO ATTACH LOWER BLOCK AND/OR BOTTOM BEAM.
4. GROUND CLEARANCE DIMENSION TO BE VARIED AS NECESSARY TO PRODUCE PROFILE WITH NO HUMPS OR DIPS.
5. FOR REHABILITATION PROJECTS, IF CONCRETE ANCHORS ARE USED IN LIEU OF ANCHOR BOLTS, THEY SHALL BE POLYESTER RESIN BONDED STAINLESS STEEL ANCHORS. DEPTH OF DRILLED HOLES FOR CONCRETE ANCHORS SHALL BE AS PER MANUFACTURER OF POLYESTER RESIN.
6. FOR CONDUIT DETAILS SEE ELECTRICAL STANDARD DRAWINGS.
7. △1 ALL W6x9 BRACKETS/OFFSET BRACKETS SHALL BE STANDARD OFFSET BRACKETS (SEE GR-1) UNLESS NOTED ON THE DETAIL OR THE PLAN.

APP	NO	DATE	REVISION
	1	10/01	ADDED NOTE 7
		12/96	ORIGINAL DRAWING

NEW JERSEY TURNPIKE AUTHORITY

NEW JERSEY TURNPIKE

PARAPET AND MEDIAN BARRIER GUARD RAIL CONNECTION DETAILS - I

MAINTENANCE & ENGINEERING SERVICES
NEW JERSEY TURNPIKE AUTHORITY
NEW BRUNSWICK NEW JERSEY

1996 STANDARD DRAWING GR-9

CONTRACT NO. SHEET NO. OF