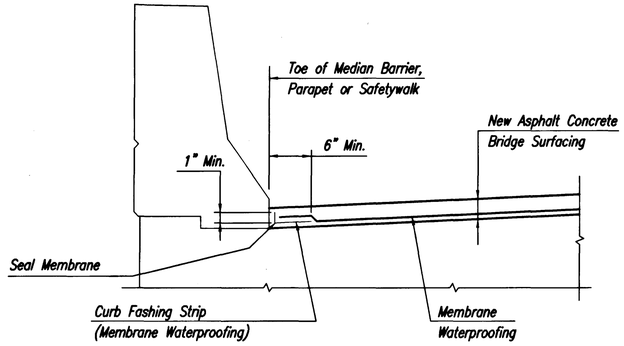

MEMBRANE WATERPROOFING DETAIL AT CURB

N.T.S.

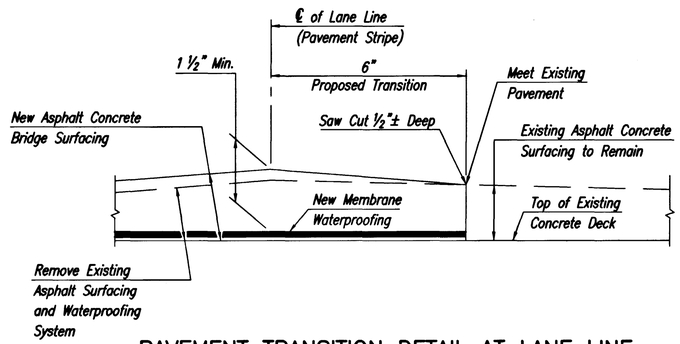

PAVEMENT TRANSITION DETAIL AT LANE LINE ON STRUCTURE

N.T.S.

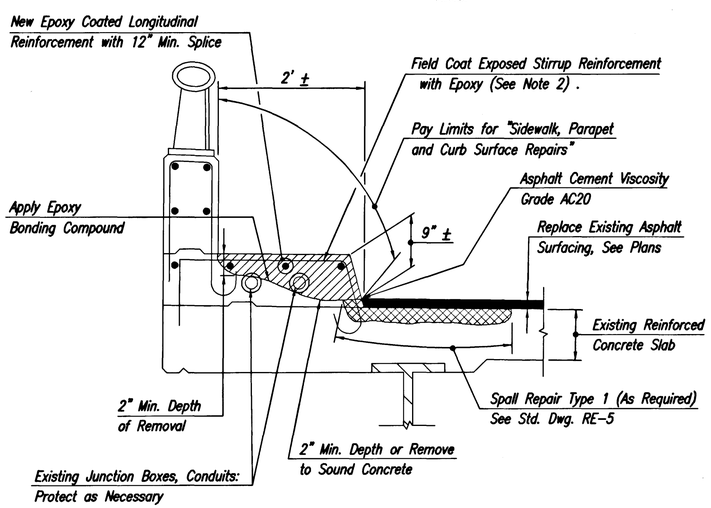

SIDEWALK, PARAPET AND CURB SURFACE REPAIR DETAILS

N.T.S.

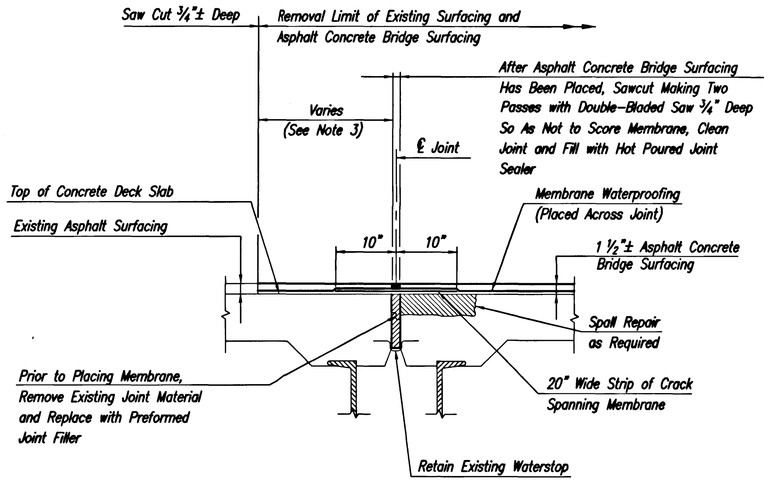

RESURFACING DETAIL AT FILLED JOINT – PIER

(FILLED JOINT – ABUTMENT SIMILAR)

N.T.S.

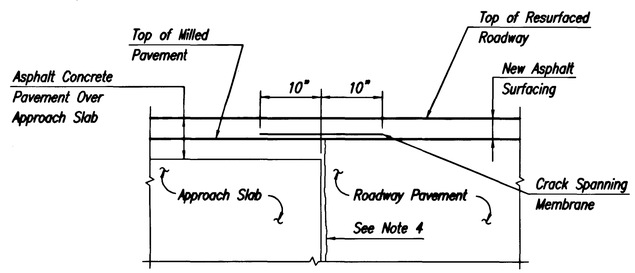

REFLECTIVE CRACK REPAIR DETAIL

N.T.S.

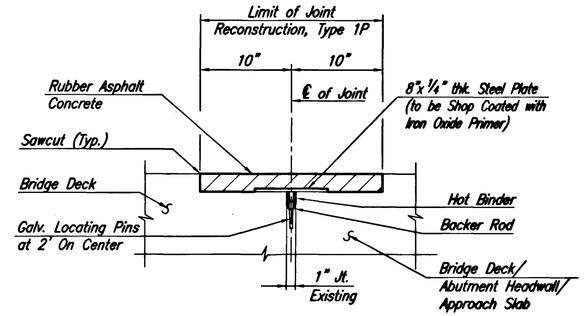

TYPE 1P JOINT RECONSTRUCTION

N.T.S.

NOTES:

1. All bridge deck rehabilitation shall conform to Section 417.
2. Any existing reinforcement that is broken, missing or has lost 25% or more of the original cross sectional area, shall be supplemented by providing new bars of the same diameter, as directed by the Engineer. The supplemental bars shall be new epoxy coated reinforcement drilled and grouted into the existing concrete.
3. At filled joint-abutment the membrane waterproofing shall extend 2 ft. past the joint, but removal of existing surfacing limits shall be as shown on the individual plan sheets, or as directed by the Engineer.
4. If crack is less than ⅜" wide, clean out and fill with hot poured joint sealer. If crack is greater than ⅜" wide, clean out and fill with non-shrink high strength mortar.

0 ½ 1 2 3 4

ORIGINAL SIZE IN INCHES

NEW JERSEY TURNPIKE AUTHORITY
NEW JERSEY TURNPIKE

RESURFACING DETAILS–BRIDGE–II

APP.	NO.	DATE	REVISION
		4/05	REISSUED; CONFORMS TO 2004 SPECIFICATIONS

OFFICE OF THE CHIEF ENGINEER
WOODBRIDGE, NEW JERSEY

2004 STANDARD DRAWING RE–6

CONTRACT NO. SHEET NO. OF