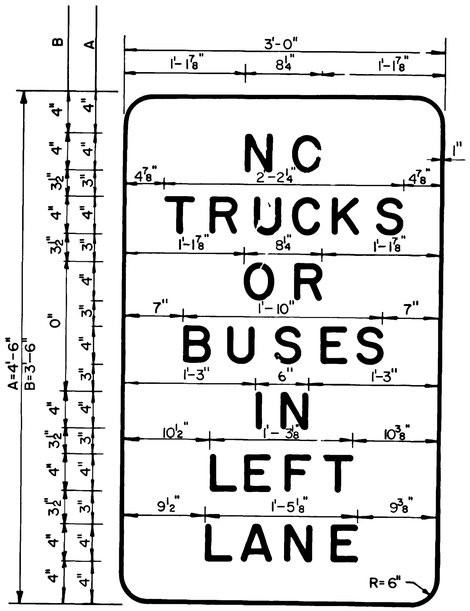

SIGN NO 33 A&B

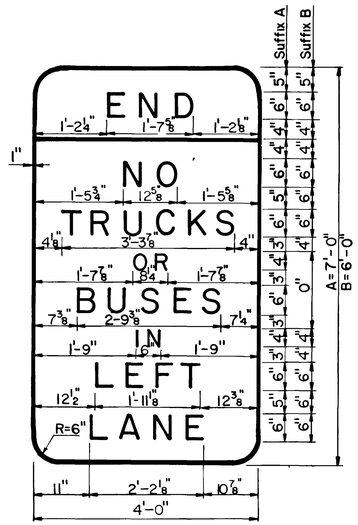

SIGN NO 35

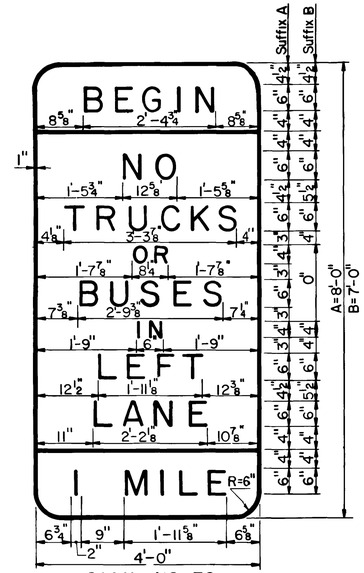

SIGN NO 36

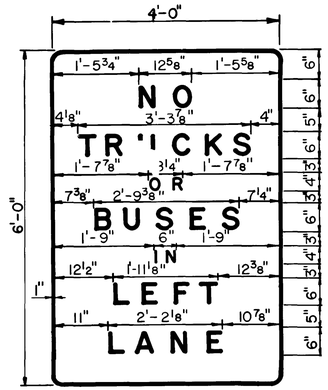

SIGN NO 37

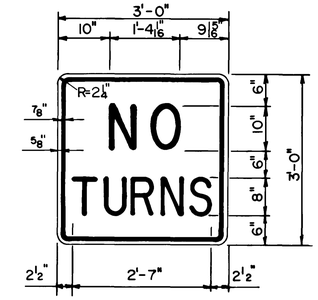

SIGN NO 41
(Series D Lettering)

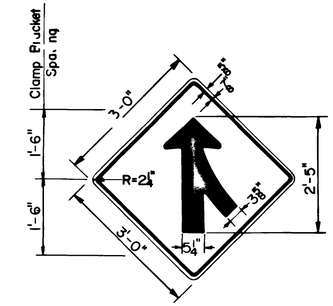

SIGN NO. 42R

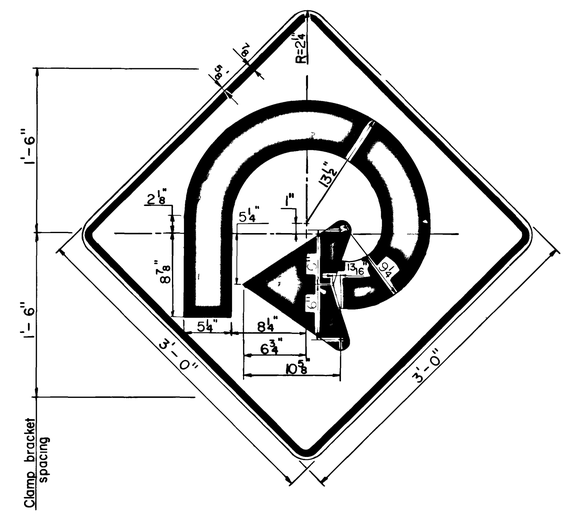

SIGN NO. 43

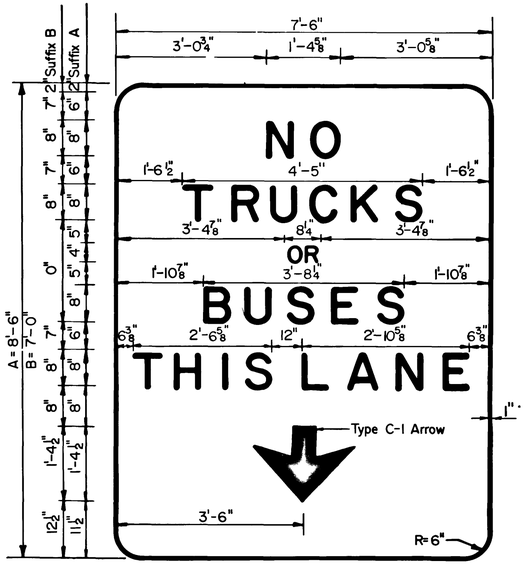

SIGN NO 34 A&B

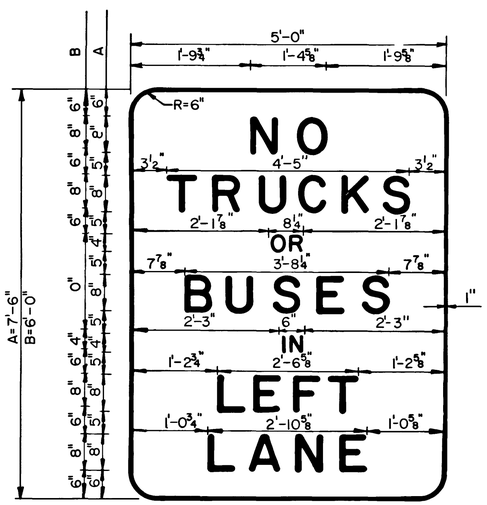

SIGN NO. 38 A&B

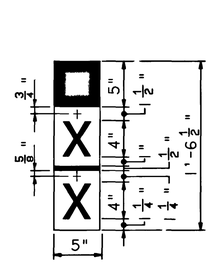

SIGN NO 39 A

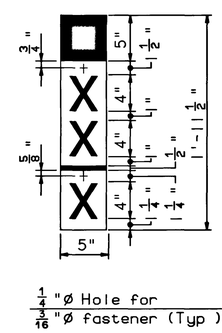

SIGN NO 39B

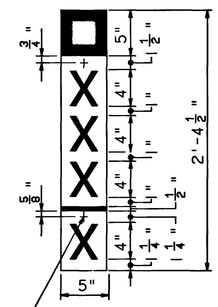

SIGN NO 39C

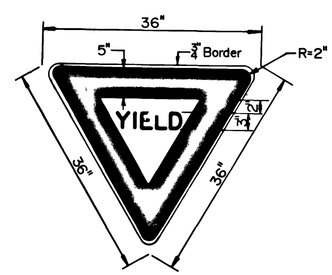

SIGN NO. 40
(Series C Lettering)

0 ½ 1 2 3 4

ORIGINAL SIZE IN INCHES

APP	NO	DATE	REVISION
	1	5/88	Revised Sign Nos 35 and 36, Minor Revisions
		12/87	Original Drawing

NEW JERSEY TURNPIKE AUTHORITY

NEW JERSEY TURNPIKE

SIGN PANEL LAYOUTS
STANDARD SIGNS 33 - 43

OFFICE OF THE CHIEF ENGINEER
NEW BRUNSWICK NEW JERSEY

1987 STANDARD DRAWING SI-8

CONTRACT NO. SHEET NO. OF