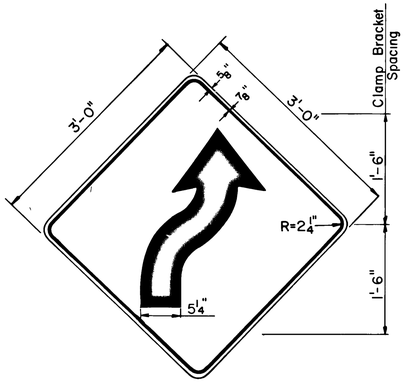

SIGN NO 44R

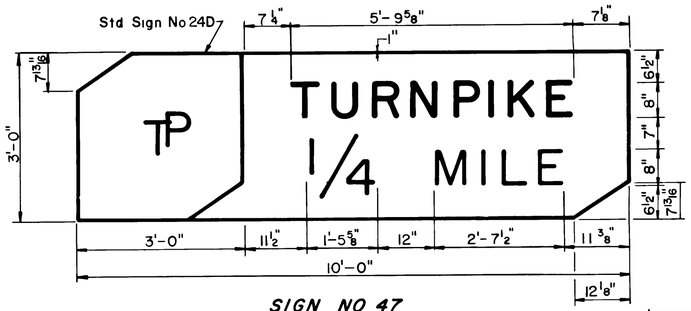

SIGN NO 47

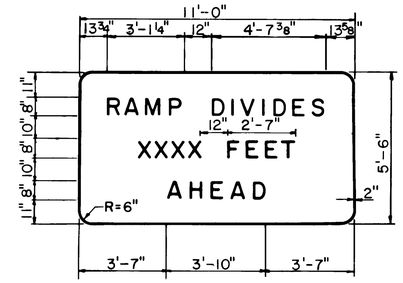

SIGN NO 50

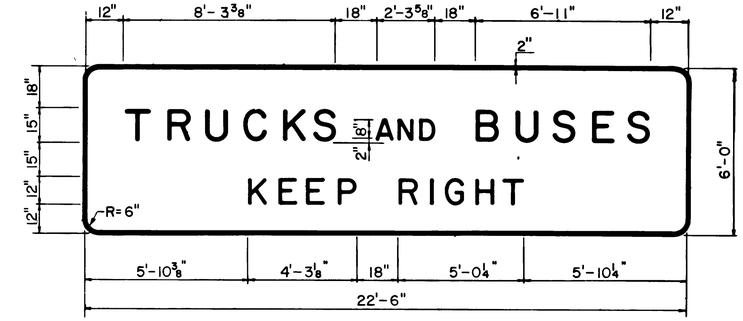

SIGN NO 54

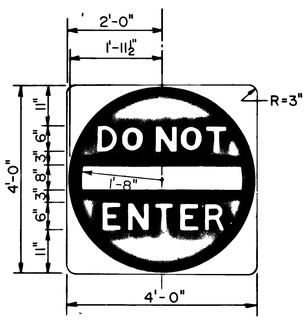

SIGN NO. 45
(Series D Lettering)

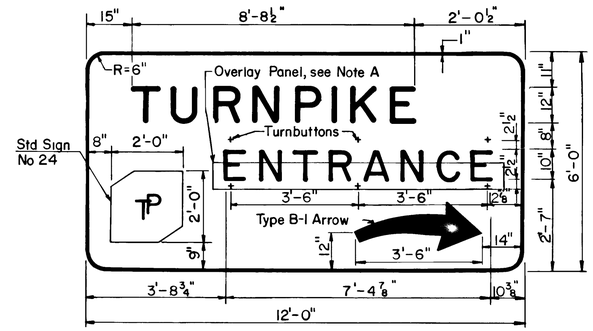

SIGN NO. 48 **

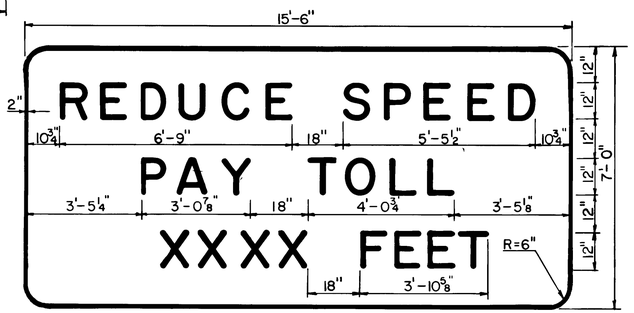

SIGN NO 51

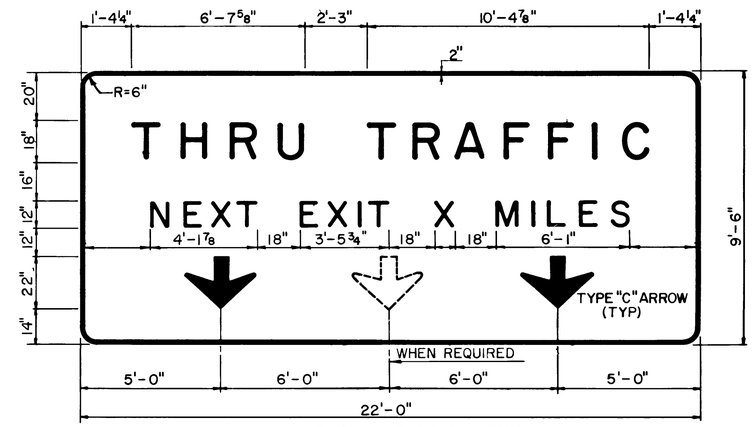

SIGN NO. 55A or 55B

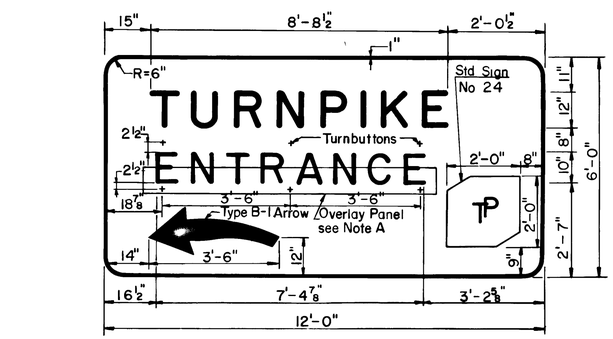

SIGN NO 49 **

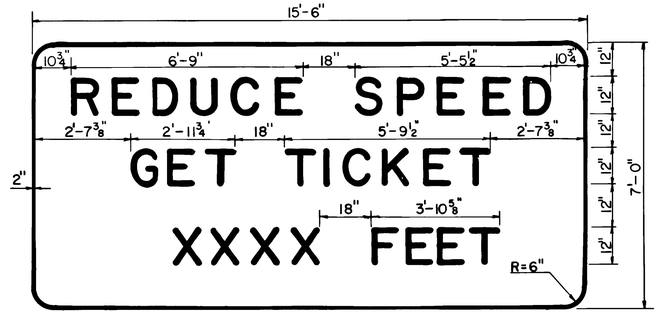

SIGN NO 52

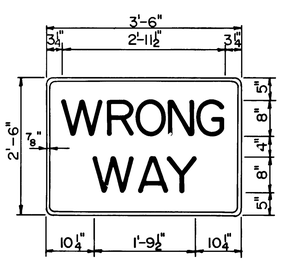

SIGN NO. 46
(Series D Lettering)

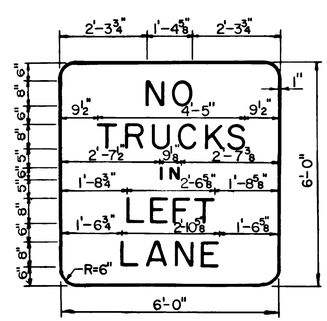

SIGN NO 53

NOTE A On Sign Nos 48 & 49 a continuously hinged overlay panel to be provided. Overlay to be 8'-0" x 0'-9" and to be of 0.125" alum Hinge to be located on ℄ of "ENTRANCE" Top half of entrance to be applied to sign background and bottom half of "ENTRANCE" to be applied to front of overlay. Back of overlay and area covered by overlay when in down position to have red reflective sheeting applied. White process background paste to be applied by reverse screening to reflective sheeting producing copy "CLOSED" in red.

** These signs are Ground Mounted and are to be lighted

ORIGINAL SIZE IN INCHES

APP	NO	DATE	REVISION
	1	5/88	Revised Sign No 51 and Minor Revision
		12/87	Original Drawing

NEW JERSEY TURNPIKE AUTHORITY
NEW JERSEY TURNPIKE

SIGN PANEL LAYOUTS
STANDARD SIGNS 44 - 55

OFFICE OF THE CHIEF ENGINEER
NEW BRUNSWICK NEW JERSEY

1987 STANDARD DRAWING SI-9

CONTRACT NO. SHEET NO. OF