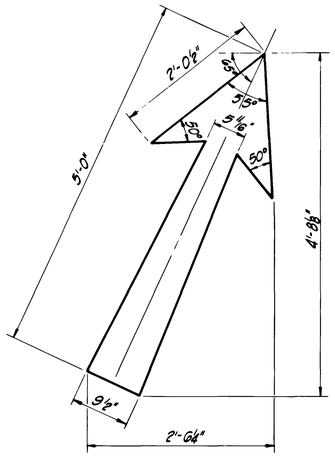

TYPE "A" ARROW

The above arrow to be used on special mainline & interchange gore signs

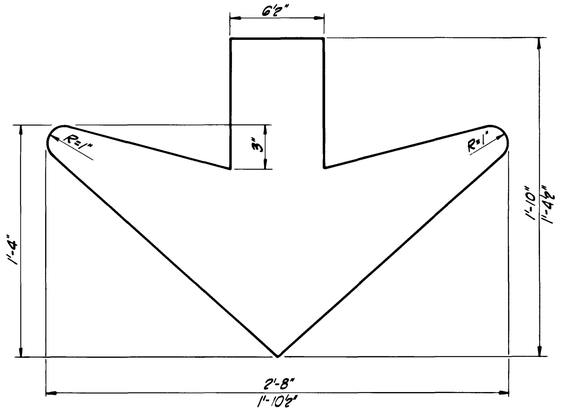

TYPE "C" & "C-1" ARROW

(Type "C-1" arrow to be smaller dim.)

The above arrow to be used on the Thru Lane Designation Sign

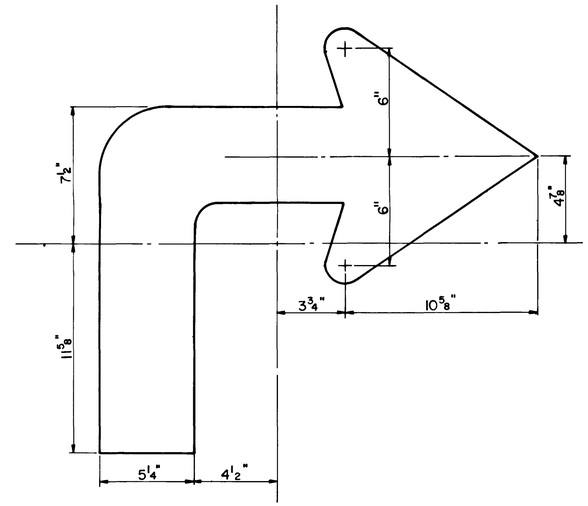

TYPE "E" ARROW

(W1-1)

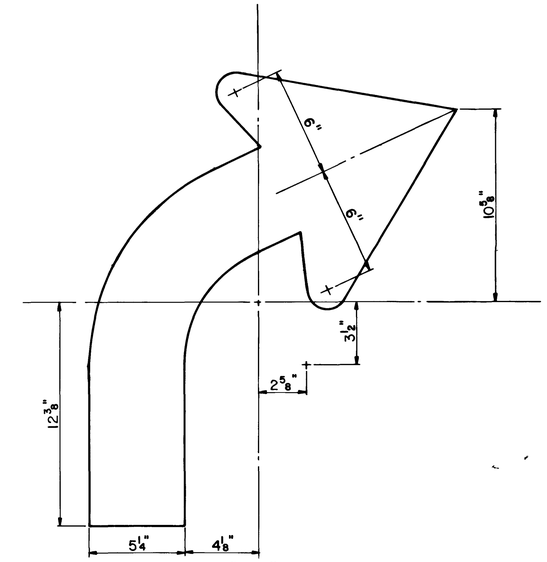

TYPE "E-1" ARROW

(W1-2)

For complete details on Type "E" and Type "E-1" Arrows see Standard Sign Panels W1-1 and W1-2 respectively, as shown in the MUTCDSH

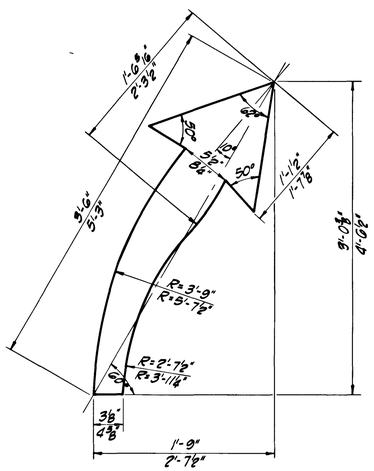

TYPE "B" & "B-1" ARROW

(Type "B-1" arrow to be smaller dim.)

Type "B" arrow to be used on Gore Signs
Type "B-1" arrow to be used on Entrance Sign (See Std Dwg SI-9)

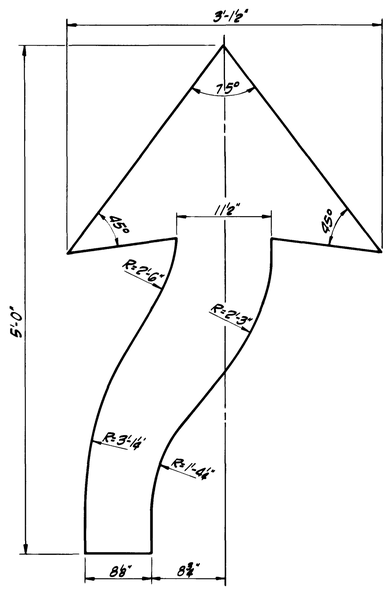

TYPE "D" ARROW

The above arrow to be used on Exit Direction Signs

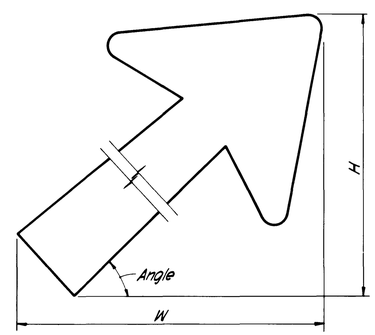

INTERSTATE - TYPE "A" & "B" ARROW

Type A arrow to be used on panels displaying two destinations or lines of copy exclusive of the line of copy containing the shield and cardinal direction

Type B arrow to be used on panels displaying a single destination or line of copy exclusive of the line of copy containing the shield and cardinal direction

LETTER SIZE	NOMINAL SIZE	TYPE	30°		45°		60°	
			H	W	H	W	H	W
8" CAPS	15 1/8 x 24 1/4	A	15 5/8	22 1/4	19 1/8	19 1/8	22 5/8	15 5/8
10.67 & 13.33 U.C. 10"-12" CAPS	18 1/4 x 29 1/4	A	18 1/2	27	23	23	27	19
15" CAPS 16" U.C.	22 1/4 x 35 5/8	A	22 5/8	32 3/4	28	28	32 3/4	22 3/4
10.67" U.C 8"-10" CAPS	14 1/2 x 17 1/4	B	12 1/2	16 1/4	14	14	16 1/8	12 1/2
13.33" U.C 12" CAPS	17 1/2 x 20 1/4	B	15 1/2	19 1/8	16 5/8	16 5/8	19	15 1/2
15" CAPS 16" U.C.	21 7/8 x 25	B	19 1/8	23 1/2	20 3/4	20 3/4	23 1/2	19 1/8

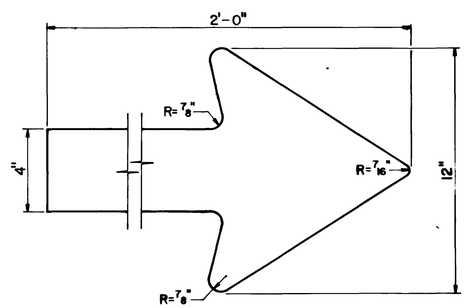

TYPE "F" ARROW

(The above arrow is to be used for Ground Mounted Directional Signs only)

ORIGINAL SIZE IN INCHES

APP	NO	DATE	REVISION
		12/96	Original Drawing

NEW JERSEY TURNPIKE AUTHORITY
NEW JERSEY TURNPIKE

STANDARD ARROW DETAILS

OFFICE OF THE CHIEF ENGINEER
NEW BRUNSWICK NEW JERSEY

1996 STANDARD DRAWING SI-12

CONTRACT NO. SHEET NO. OF