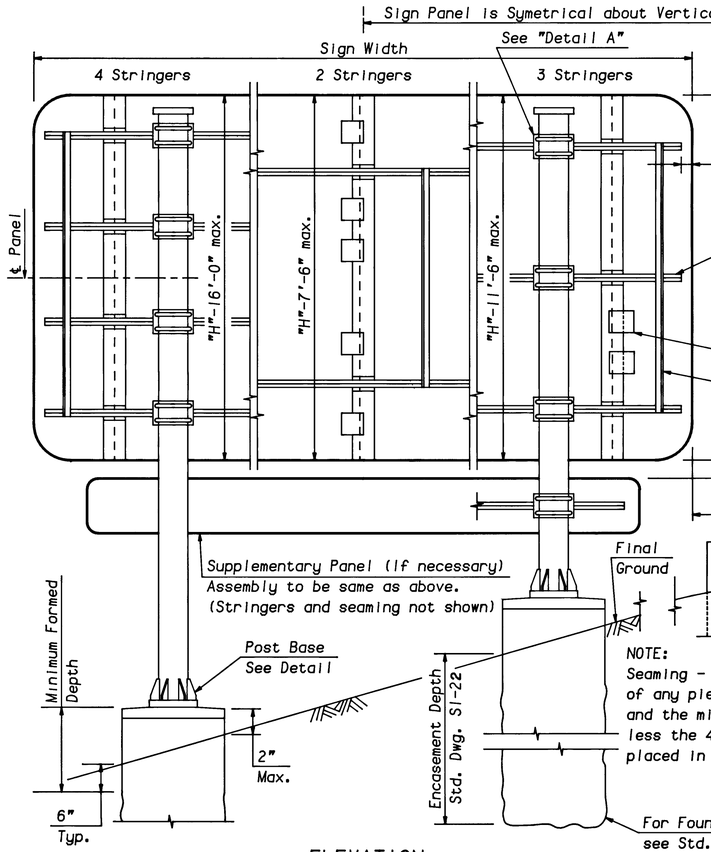

ELEVATION
GROUND MOUNTED SIGN
ALUMINUM TUBE POST

NOTE:
Seaming - On any sign panel, the max. width of any piece of sheet used shall be 4' and the min. width shall be 2'. All pieces less the 4' in width shall be symmetrically placed in the center of the sign.

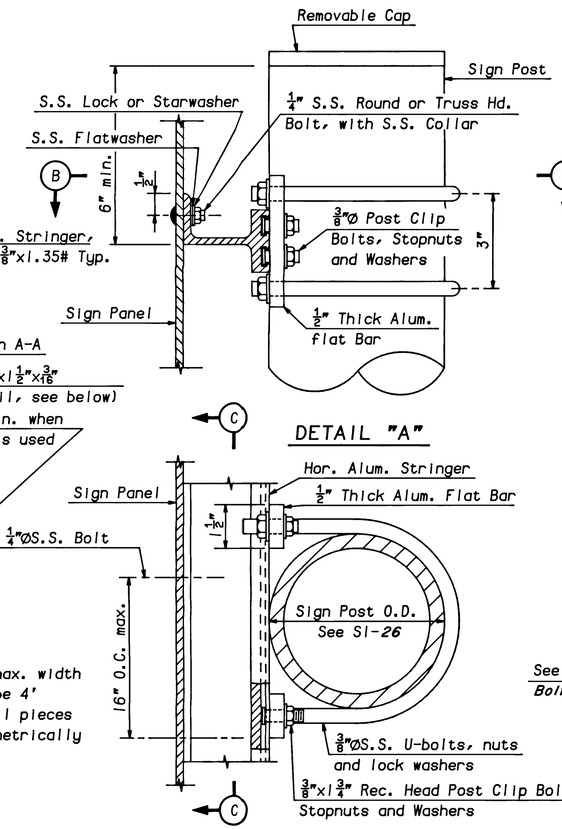

DETAIL "A"

SECTION B-B

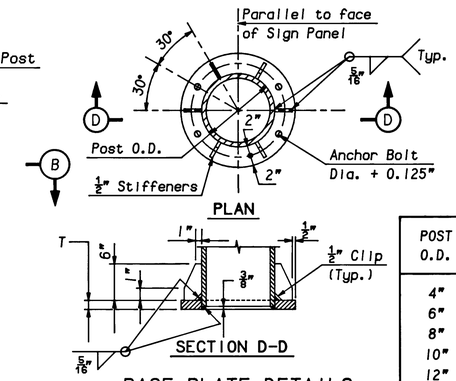

BASE PLATE DETAILS

POST O.D.	ANCHOR BOLT DIA.	BASE ℄ DIM. T
4"	½"	1"
6"	⅝"	1⅛"
8"	¾"	1¼"
10"	⅞"	1⅜"
12"	1"	1⅝"

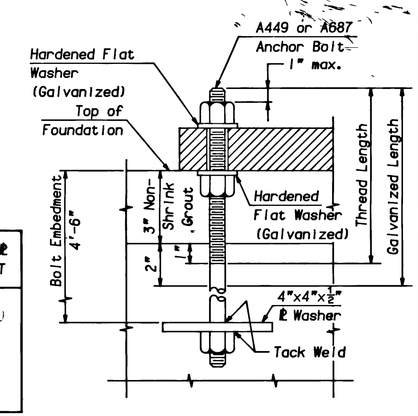

ANCHOR BOLT DETAIL

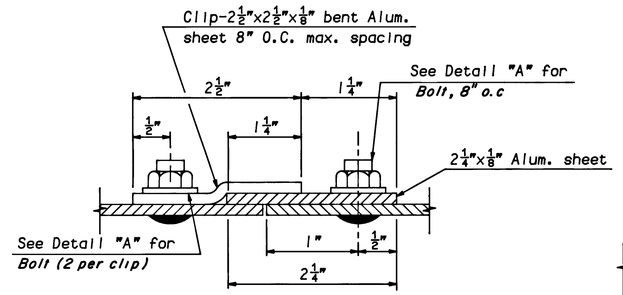

SECTION A-A

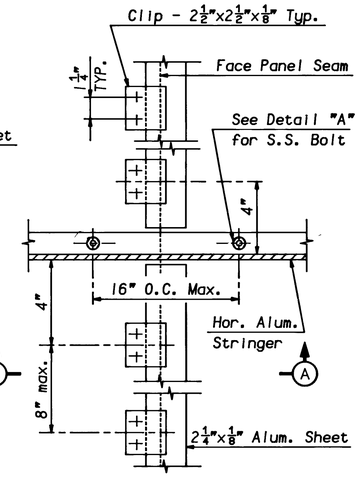

SECTION C-C

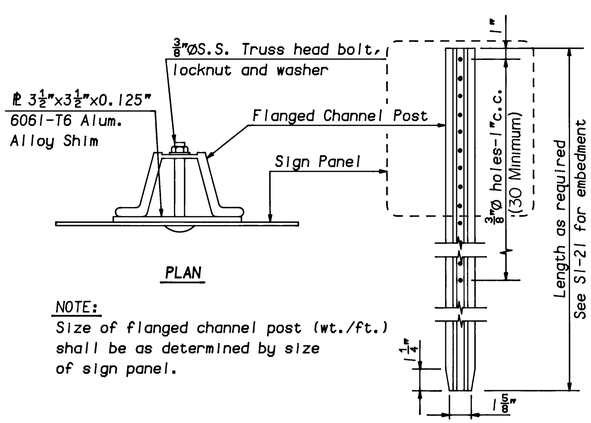

NOTE:
Size of flanged channel post (wt./ft.) shall be as determined by size of sign panel.

SINGLE FLANGED CHANNEL
SIGN POST ASSEMBLY

(For sign mounting height and offset, see "Ground Mounted Sign - Aluminum Tube Post - Elevation" above)

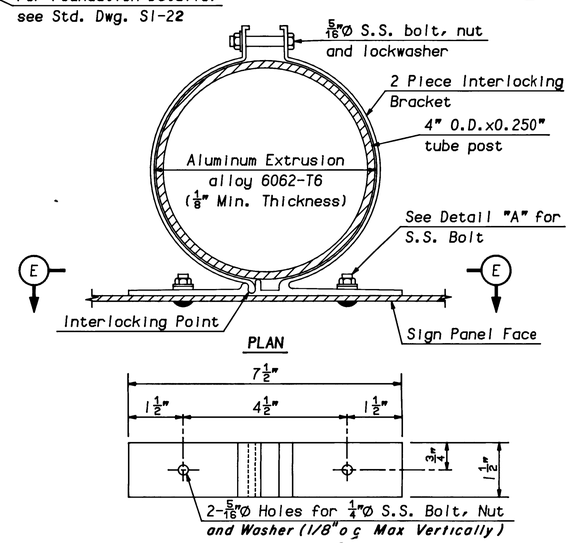

NOTE:
If horizontal aluminum stringers are required in accordance with Standard Drawing SI-25, sign to post attachment details shall be similar to those shown in Detail "A".

SINGLE ALUMINUM TUBE SIGN POST ASSEMBLY

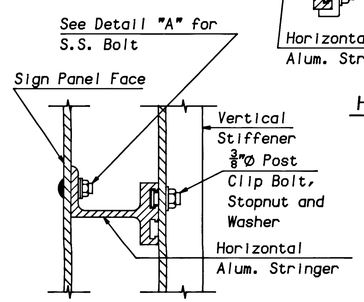

VERTICAL STIFFENER
ATTACHMENT

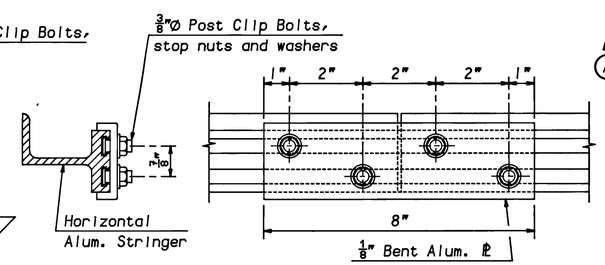

HORIZONTAL STRINGER SPLICE
(Above detail to be used only upon approval of Engineer.)

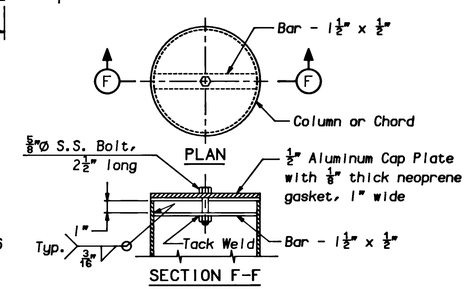

REMOVABLE CAP DETAILS

NOTES:

1. All material to be Aluminum Alloy 6061-T6 unless otherwise noted.
2. S.S. denotes Stainless Steel.
3. All material and fabrication shall conform to the current edition of the A.A.S.H.T.O. "Standard Specfications for Structural Supports for Highway Signs, Luminaires and Traffic Signals."

0 ½ 1 2 3 4
ORIGINAL SIZE IN INCHES

APP	NO	DATE	REVISION
		3/97	ORIGINAL DRAWING

NEW JERSEY TURNPIKE AUTHORITY
NEW JERSEY TURNPIKE

GROUND MOUNTED SIGN DETAILS

OFFICE OF THE CHIEF ENGINEER
NEW BRUNSWICK NEW JERSEY

1996 STANDARD DRAWING SI-13

CONTRACT NO. SHEET NO. OF