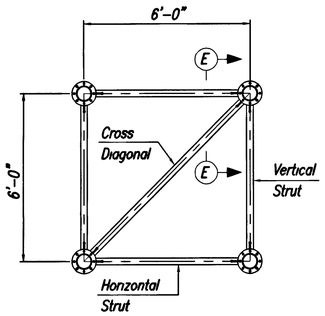

SECTION A-A
NTS

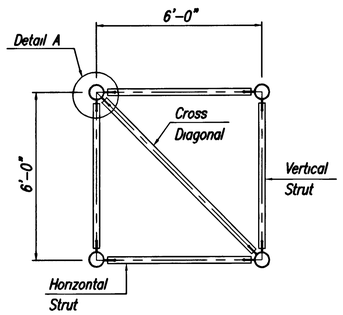

SECTION B-B
NTS.

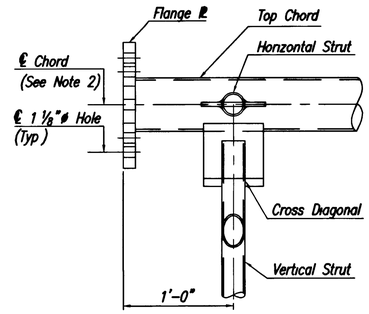

SECTION E-E
1 1/2"=1'-0"

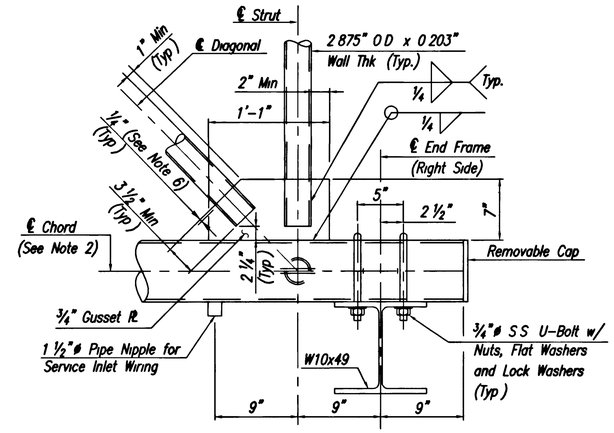

DETAIL 1
1 1/2"=1'-0"
(For the location at the truss support of the End Frame only. End Post not shown for clearance)

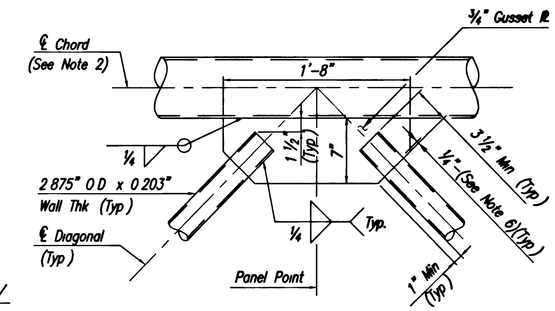

DETAIL 2
1 1/2"=1'-0"

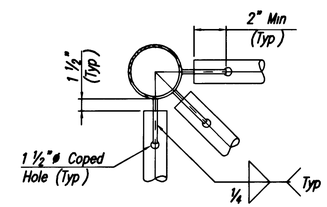

DETAIL A
1 1/2"=1'-0"

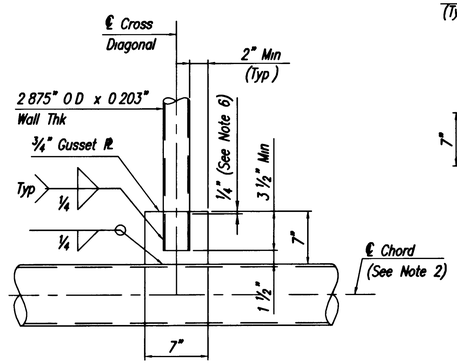

DETAIL 3
1 1/2"=1'-0"

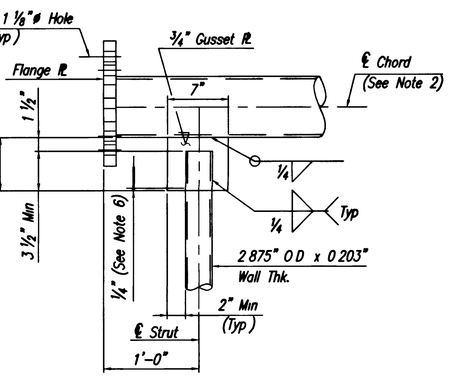

DETAIL 4
1 1/2"=1'-0"

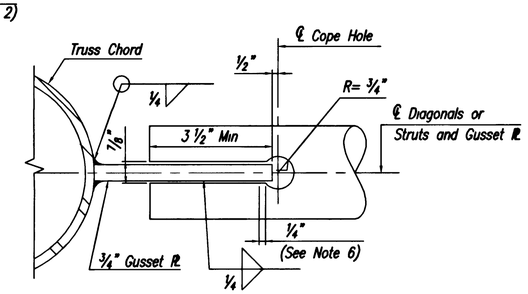

COPE HOLE DETAIL FOR TRUSS
NTS

NOTES:

1. Sign support structures shall conform to Section 406.
2. Truss chords shall be 6.625" OD with 0.280" wall thickness for all spans up to and including 100 feet 6.625" OD with 0.432" wall thickness chords shall be used for spans ranging from 105 feet up to and including 135 feet.
3. S.S. denotes Stainless Steel.
4. For End Frame Details, Removable Cap Details and End Frame Connection Details, see Standard Drawing SI-17A and SI-17B
5. Pipe for sign structures shall meet the requirements of either ASTM A714 or ASTM A847 As an alternate, cylindrical tubes produced by forming and longitudinally seam welding steel plate conforming to the requirements of ASTM A709, Grade 50W(A588) or ASTM A242 may be used. Only one longitudinal seam permissible per post
6. Welds for 2.875" OD with 0.203" wall thickness pipe to gusset plate connections shall be terminated 1/4 inch from the edge of the gusset plate.
7. For the locations of Details 1 to 4, Schematic Truss Details, Sign Hanger Connection Detail and Flange Plate detail, see Standard Drawing SI-16A.
8. Structural steel plates and shapes shall conform to the requirements of ASTM A709, Grade 50W unless otherwise noted.

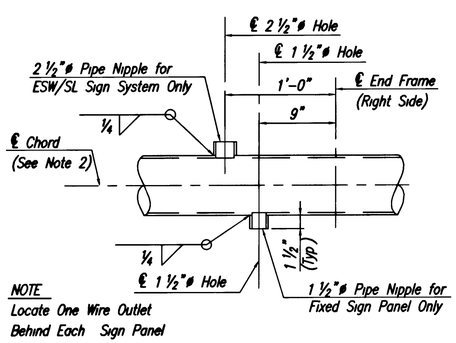

NOTE
Locate One Wire Outlet Behind Each Sign Panel

DETAIL OF WIRE OUTLET ON CHORD
1 1/2"=1'-0"
(Only 1 1/2"ø or 2 1/2"ø pipe nipple shown here for clearance)

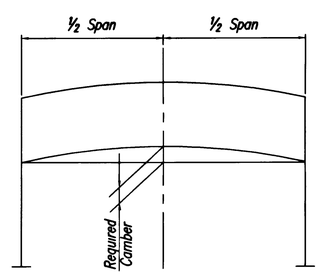

CAMBER DIAGRAM
NTS

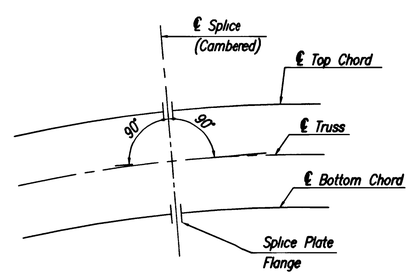

CAMBER DETAIL
NTS

CAMBER NOTE

Camber shall be obtained by increasing the lengths of the top chords and decreasing the lengths of the bottom chord as shown. Chord splice flanges shall be skewed to the angle before being welded to the chords The required camber shall be as provided in Table A on Std Dwg SI-16A. No force shall be applied in providing camber An alternate method of obtaining camber may be used as approved by the Engineer

0 1/2 1 2 3 4
ORIGINAL SIZE IN INCHES

NEW JERSEY TURNPIKE AUTHORITY
NEW JERSEY TURNPIKE

SPAN TYPE SIGN STRUCTURE (STEEL)
TRUSS DETAILS-2

OFFICE OF THE CHIEF ENGINEER
WOODBRIDGE, NEW JERSEY

2004 STANDARD DRAWING SI-16B

APP	NO	DATE	REVISION
		04/05	REISSUED, CONFORMS TO 2004 SPECIFICATIONS

CONTRACT NO. SHEET NO. OF