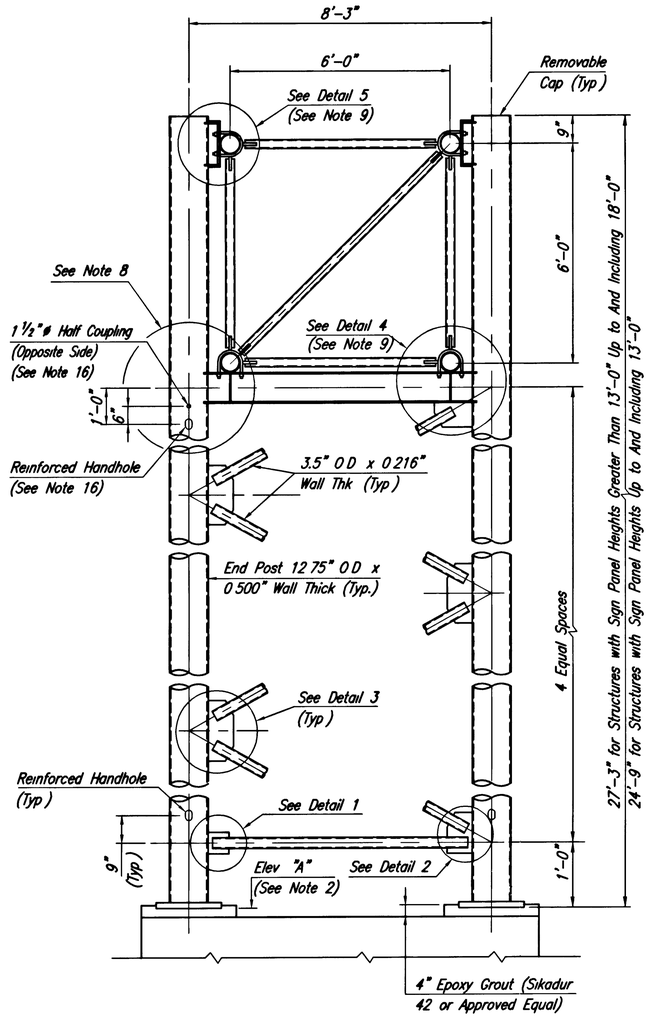

END FRAME DETAIL

1/2" = 1'-0"

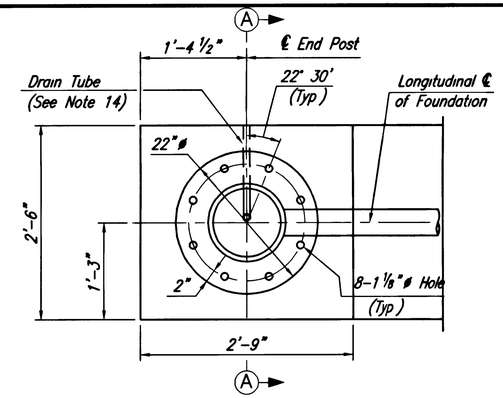

PLAN VIEW

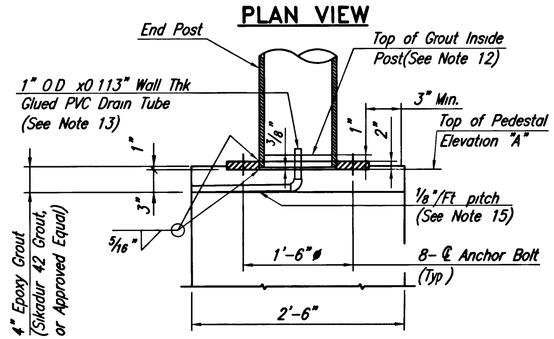

SECTION A-A
BASE PLATE DETAILS

NTS

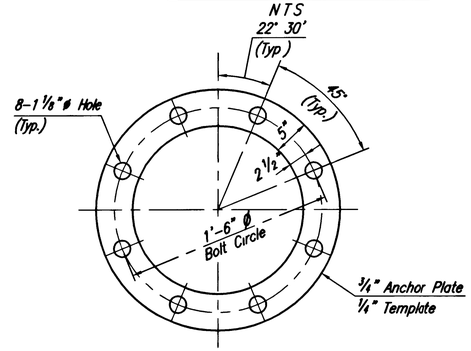

ANCHOR PLATE & TEMPLATE DETAIL

NTS

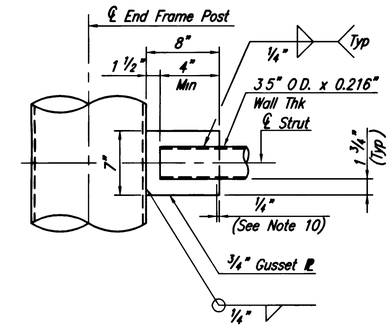

DETAIL 1

1 1/2" = 1'-0"

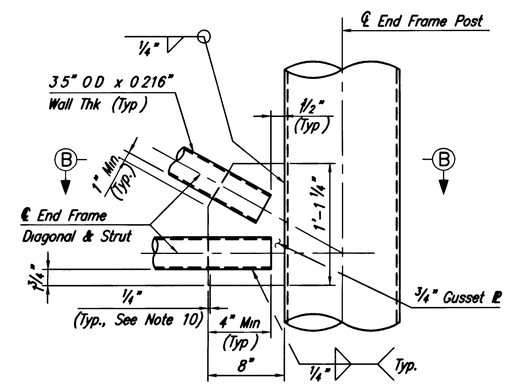

DETAIL 2

1 1/2" = 1'-0"

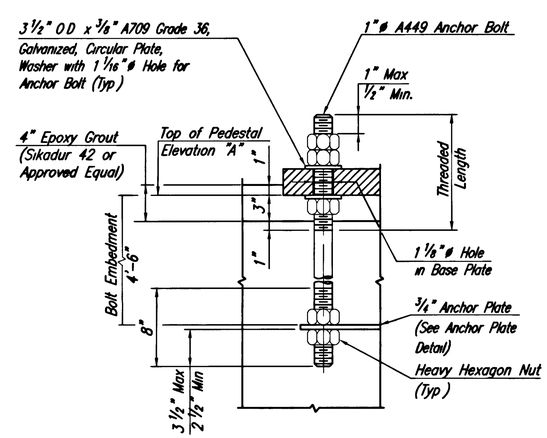

ANCHOR BOLT DETAIL

1 1/2" = 1'-0"

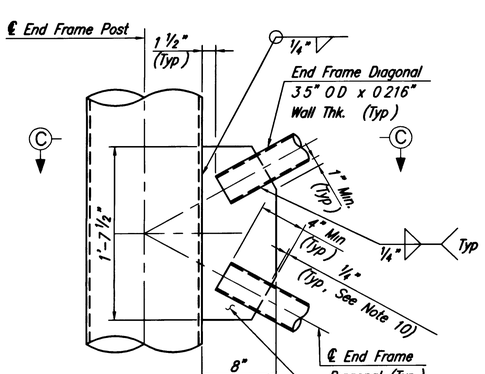

DETAIL 3

1 1/2" = 1'-0"

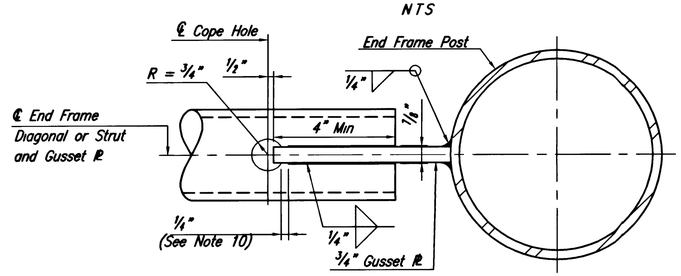

SECTIONS B-B & C-C

NTS

(Section C-C Opposite Hand)

NOTES:

1. Sign support structures shall conform to Section 406
2. Elevation "A" shall be 4'-0" Min above the high point of the roadway cross section and shall be the same for both pedestals of each structure.
3. S.S. denotes Stainless Steel
4. For Truss Connection Details, see Standard Drawing SI-16A.
5. Structural steel plates and shapes shall conform to the requirements of ASTM A709, Grade 50W unless otherwise noted.
6. Pipe for sign support structures shall meet the requirements of either ASTM A714 or ASTM A847. As an alternate, cylindrical tubes produced by forming and longitudinally seam welding steel plates conforming to the requirements of ASTM A709, Grade 50W (A588) or ASTM A242 may be used. Only one longitudinal seam weld permissible per post.
7. For location of additional half couplings on truss, see Standard Drawing E-21.
8. Arrangement shown is for sign lighting provisions with directional type sign panels only
9. For Details 4 and 5, Reinforced Handhole Detail, Removable Cap Details, Half Coupling Installation Detail and Electrical Provisions for ESW/SL sign system, see Standard Drawing SI-17B
10. Welds for 3.5" OD with 0.216" wall thickness pipe to gusset plate connections shall be terminated 1/4 inch from the edge of the gusset plate.
11. A single anchor bolt template fabricated of 1/4" thickness structural steel (ASTM A709, Grade 36) shall be furnished for each overhead sign structure. The template shall be used by the Contractor to simultaneously align the sixteen (16) anchor bolts prior to pouring the foundation concrete. Structural steel angles (ASTM A709, Grade 36) shall be used, as necessary, to stiffen the template and assure that the bolt patterns are aligned properly while maintaining the 8'-3" center to center end post spacing
12. After initial set of grout, the Contractor shall install additional grout to this elevation
13. After grout has set, break off and remove section of drain tube extending above grout
14. The drain tube shall be located on the side of the pedestal facing away from traffic, if possible
15. During grout pour, the horizontal leg of the drain tube shall be secured to the top of the pedestal with a conduit pipe strap.
16. The Reinforced Handhole and 1/2" diameter Half Coupling for Wiring shall be located at the front post of the right side End Frame.

0 1/2 1 2 3 4

ORIGINAL SIZE IN INCHES

NEW JERSEY TURNPIKE AUTHORITY
NEW JERSEY TURNPIKE

SPAN TYPE SIGN STRUCTURE (STEEL)
END FRAME DETAILS – 1

APP	NO	DATE	REVISION
		04/05	REISSUED, CONFORMS TO 2004 SPECIFICATIONS

OFFICE OF THE CHIEF ENGINEER
WOODBRIDGE, NEW JERSEY

2004 STANDARD DRAWING SI-17A

CONTRACT NO. SHEET NO. OF