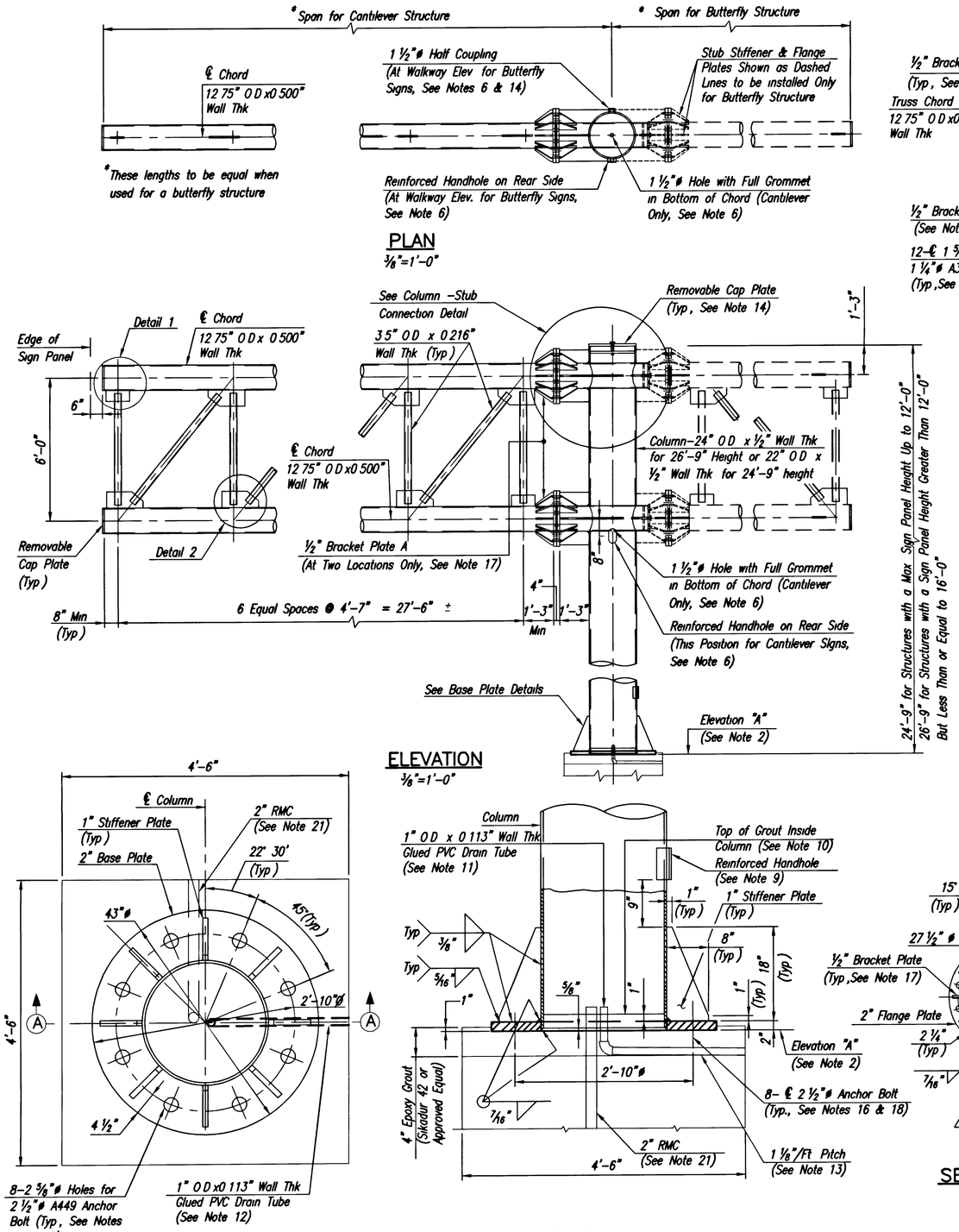

NOTES:

1. Sign support structures shall conform to Section 406
2. Elevation "A" shall be 4'-0" Min above the high point of the roadway cross section.
3. S S denotes Stainless Steel
4. Pipe for sign support structures shall meet the requirements of either ASTM A714 or ASTM A847 As an alternate, cylindrical tubes produced by forming and longitudinally seam welding steel plates conforming to the requirements of ASTM A709, Grade 50W (A588) or ASTM A242 may be used. Only one longitudinal seam weld permissible per post
5. Structural steel plates and shapes shall conform to the requirements of ASTM A709, Grade 50W, unless otherwise noted
6. Arrangement shown is for sign lighting provisions with directional type sign panels only For ESW/SL sign systems, see Standard Drawing SI-17B.
7. For other details and notes for the cantilever structure, see Standard Drawing SI-18B.
8. For Horizontal Stub Stiffener Detail and Vertical Stub Stiffener Detail, see Standard Drawing No SI-18B
9. For "Reinforced Handhole" Detail, see Standard Drawing SI-17B.
10. After initial set of grout, the Contractor shall install additional grout to this elevation.
11. After grout has set, cut off and remove section of drain tube extending above grout
12. Orientation of 1" O D with 0 113" wall thickness PVC Drain Pipe shall be located on the side of the pedestal facing away from the roadway, if possible.
13. During grout pouring, the horizontal leg of the drain tube shall be secured to the top of the pedestal with a conduit pipe strap
14. For Removable Cap Details and Half Coupling Installation Detail, see Standard Drawing SI-17B
15. For locations of additional half couplings on truss, see Standard Drawing E-21.
16. For Anchor Bolt Detail, see Standard Drawing SI-18B
17. For the sizes of bracket plate and bracket plate A, see Bracket Plate Detail on Standard Drawing SI-18B
18. 1 1/4" diameter A325 splice bolts shall be required to have 71 kips in tension. Both A325 and A449 bolts soil be provided with heavy hexagon nuts and washers.
19. All bolts, nuts and washers shall be ASTM A325, Type 3.
20. For details of 1" Vertical Stud Stiffener and 1" Horizontal Stud Stiffener, see Standard Drawing SI-18B
21. Orientation of 2" RMC shall run parallel to the Center Line of New Jersey Turnpike allowing clearance to anchor bolts and reinforcement.
22. For cantilever sign structures, the maximum span as measured from the centerline of column to the end of the truss arm shall be 32'-0" The maximum sign area for sign panel heights up to and including 12'-0" shall be 225 Sq Ft. and for sign panel heights exceeding 12'-0" but less than or equal to 16'-0" shall be 300 Sq Ft. Any cantilever sign structure exceeding these limitations shall be designed by the Engineer.
23. For butterfly sign structures, the maximum sign area for sign panel heights up to and including 12'-0" shall be 375 Sq Ft and for sign panel heights exceeding 12'-0" but less than or equal to 16'-0" shall be 500 Sq Ft. Any butterfly sign structure exceeding these limitations shall be designed by the Engineer.
24. For Top Chord Splice Assembly Weld Detail, see Standard Drawing SI-18B

0 1/2 1 2 3 4
ORIGINAL SIZE IN INCHES

APP	NO	DATE	REVISION
		04/05	REISSUED, CONFORMS TO 2004 SPECIFICATIONS

NEW JERSEY TURNPIKE AUTHORITY
NEW JERSEY TURNPIKE

CANTILEVER SIGN SUPPORT STRUCTURES TRUSS AND POST DETAILS-1

OFFICE OF THE CHIEF ENGINEER
WOODBRIDGE, NEW JERSEY

2004 STANDARD DRAWING SI-18A

CONTRACT NO. SHEET NO. OF