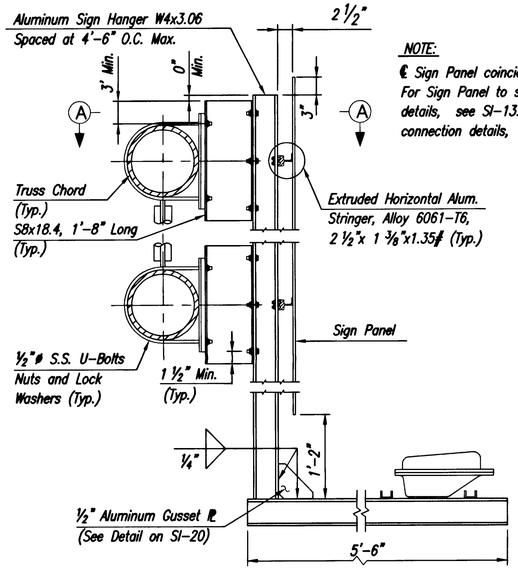

SIDE ELEVATION

NOTE:
℄ Sign Panel coincides with ℄ Truss.
For Sign Panel to stringer connnection details, see SI-13. For stringer to hanger connection details, see SI-20.

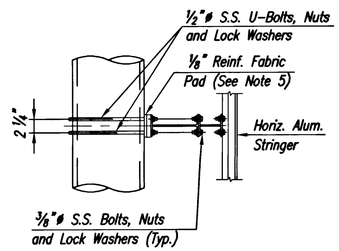

SECTION A-A

ERECTION DETAIL - BUTTERFLY STRUCTURE
1" = 1'-0"

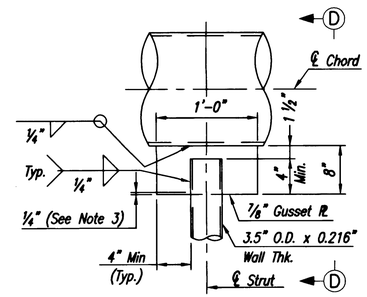

DETAIL 1
1 1/2"=1'-0"

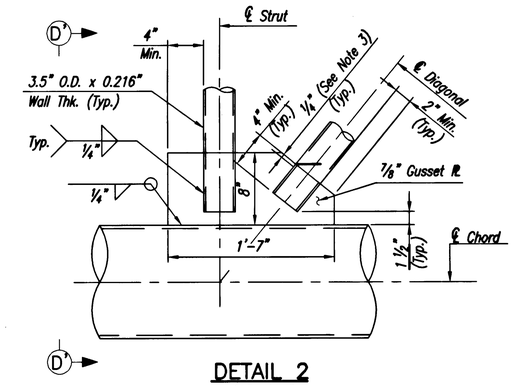

DETAIL 2
1 1/2"=1'-0"

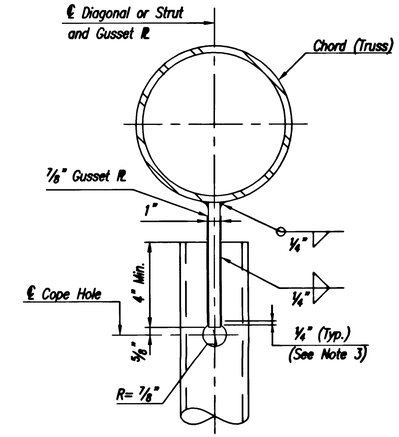

SECTIONS D-D & D'-D'
(Section D'-D' Opposite Hand)
N.T.S.

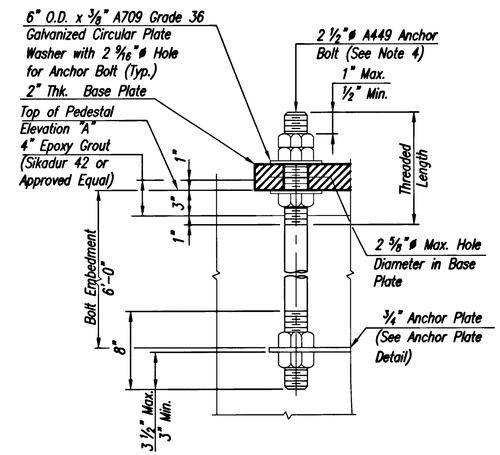

ANCHOR BOLT DETAIL
1 1/2"=1'-0"

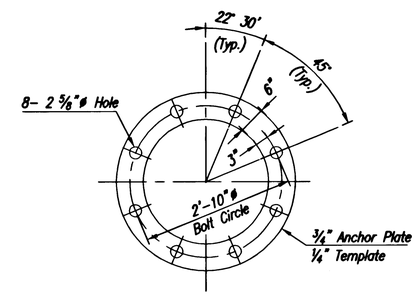

ANCHOR PLATE & TEMPLATE DETAIL
N.T.S.

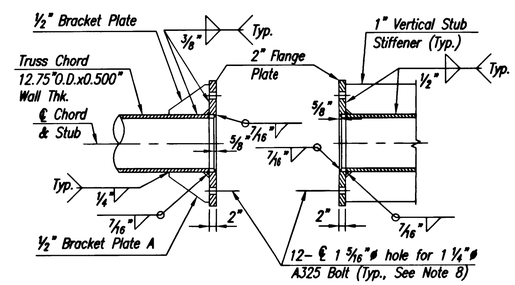

TOP CHORD SPLICE ASSEMBLY WELD DETAIL
3/4"=1'-0"
(Bottom Chord Similar)

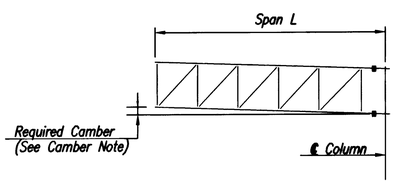

CAMBER DIAGRAM
N.T.S.

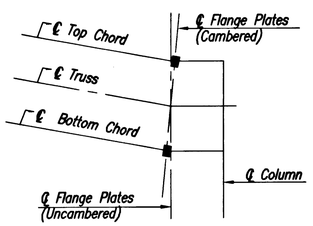

CAMBER DETAIL
N.T.S.

CAMBER NOTE:

Camber shall be obtained by shortening the length of the top chord stub and extending the length of the bottom chord stub. Chord flange plates shall be skewed accordingly before being welded to the chords. The required camber shall be L/1000 plus the dead load camber. No force shall be applied in providing the camber. An alternate method of cambering may be used as approved by the Engineer.

NOTES:

1. Sign support structures shall conform to Section 406.
2. For other details and notes for cantilever sign structures, see Standard Drawing SI-18A.
3. Welds for 3.5" O.D. with 0.216" wall thickness pipe to gusset plate connections shall be terminated 1/4 inch from the edge of the gusset plate.
4. 2 1/2" diameter anchor bolts shall be provided with heavy hexagon nuts and washers.
5. For Elevation "A", see Note 2 on Standard Drawing SI-17A and SI-17B.
6. Anchor plate and template shall conform the requirements of ASTM A709 Grade 36.
7. Structural steel plates and shapes shall conform to the requirements of ASTM A709, Grade 50W unless otherwise noted.
8. 1 1/4" diameter A325 splice bolts shall be required to have 71 kips in tension. Both A325 and A449 bolts sall be provided with heavy hexagon nuts and washers.

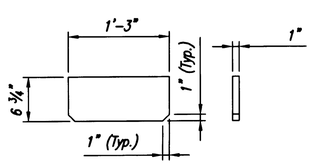

VERTICAL STUB STIFFENER DETAIL
N.T.S.

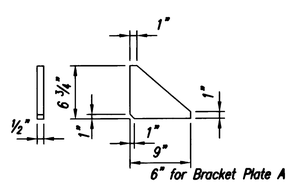

BRACKET PLATE DETAIL
N.T.S.

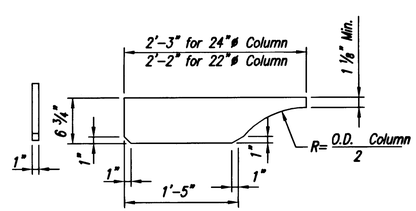

HORIZONTAL STUB STIFFENER DETAIL
N.T.S.

0 1/2 1 2 3 4
ORIGINAL SIZE IN INCHES

NEW JERSEY TURNPIKE AUTHORITY
NEW JERSEY TURNPIKE

CANTILEVER SIGN SUPPORT STRUCTURES TRUSS AND POST DETAILS-2

APP.	NO.	DATE	REVISION
		04/05	REISSUED; CONFORMS TO 2004 SPECIFICATIONS

OFFICE OF THE CHIEF ENGINEER
WOODBRIDGE, NEW JERSEY

2004 STANDARD DRAWING SI-18B

CONTRACT NO. SHEET NO. OF