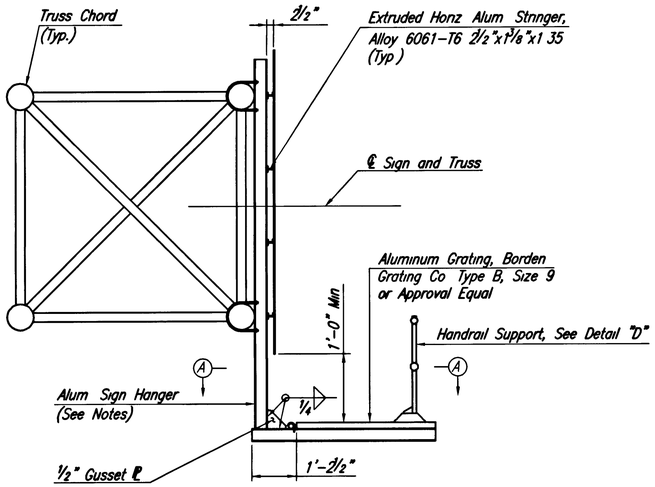


## TYPICAL SECTION

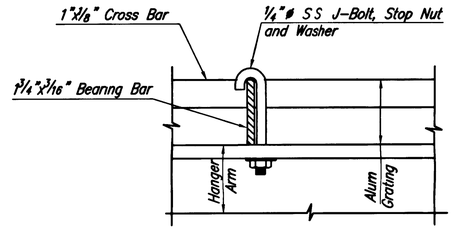


## DETAIL "A"

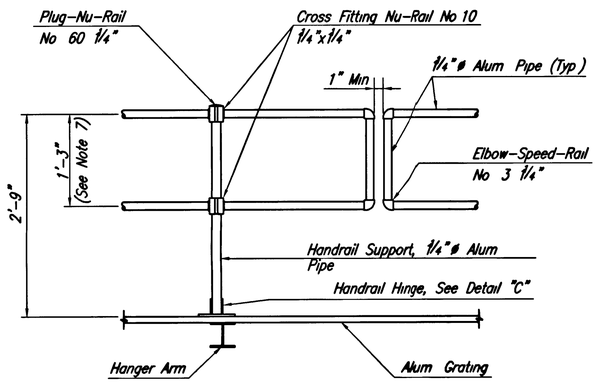


## ELEVATION OF HANDRAIL DETAIL "D"

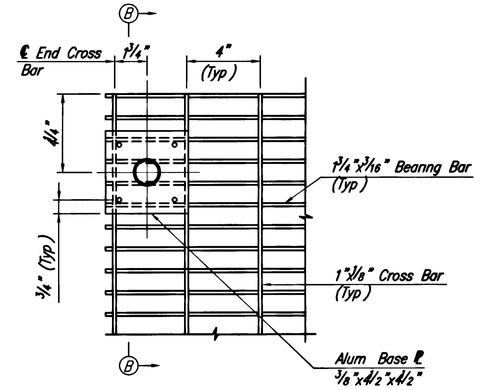


## PARTIAL GRATING PLAN

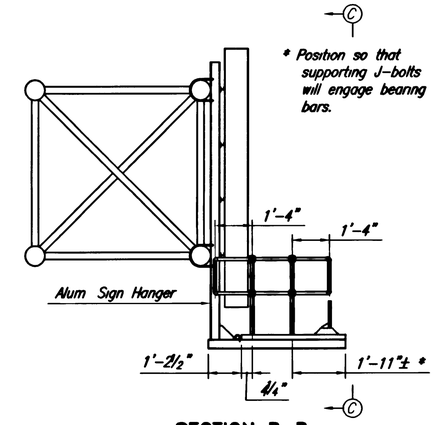


## SECTION B-B

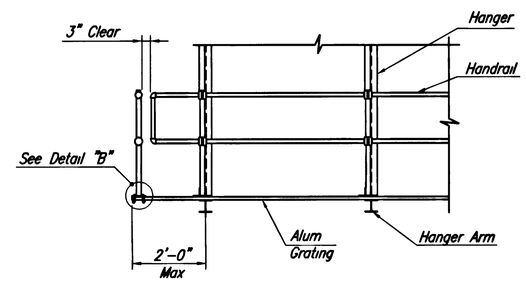


## VIEW C-C

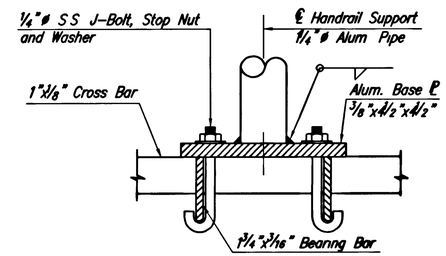


## DETAIL "B"

## FIXED HANDRAIL TO GRATING CONNECTION DETAILS

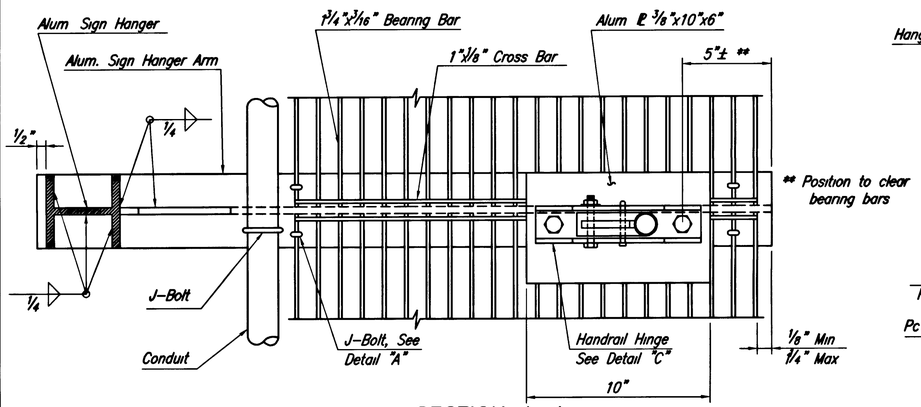


## SECTION A-A

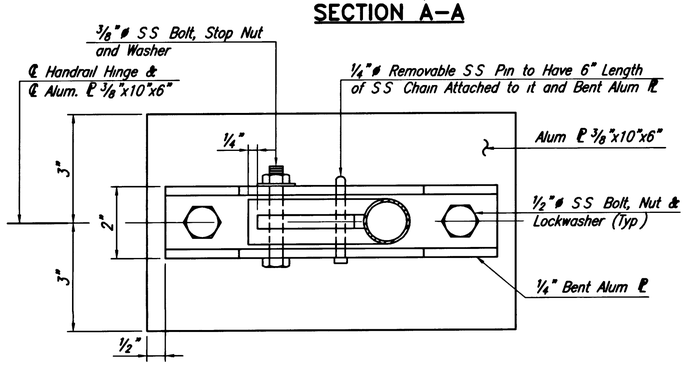


## PLAN

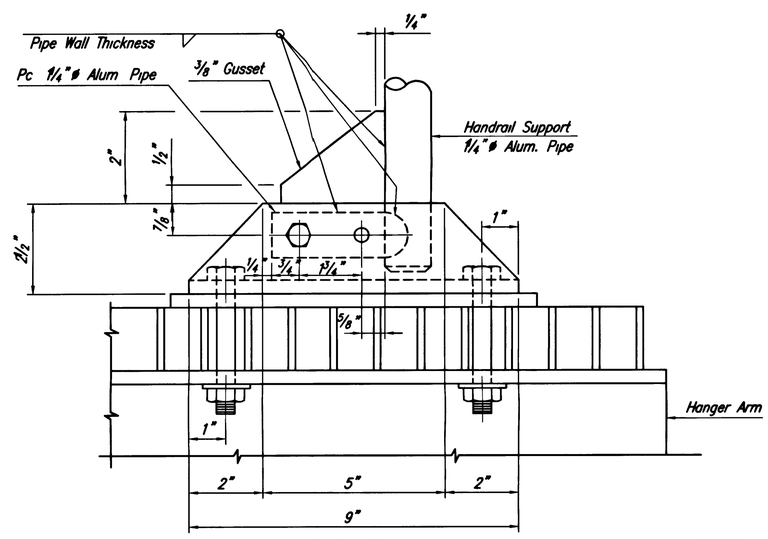


## ELEVATION

## HANDRAIL HINGE – DETAIL "C"

## NOTES:

1. Sign support structures shall conform to Section 406
2. SS denotes Stainless Steel
3. For gusset plate detail and hanger arm lengths, see SI-20.
4. Aluminum sign hangers shall be spaced 4'-6" max. o.c.. The maximum grating cantilever as measured to the centerline of hanger shall be 2'-0".
5. Aluminum grating for Span Type Sign Structures shall extend over the full width of roadway plus shoulders and terminate two (2) feet from the centerline of each end frame.
6. Sign panels shall cantilever no more than 2'-3" past the centerline of aluminum sign hanger
7. Where appropriate adjust the position of lower handrail to avoid interference with luminaires.

0 ½ 1 2 3 4
ORIGINAL SIZE IN INCHES

| APP | NO | DATE | REVISION |
|---|---|---|---|
| | | 04/05 | REISSUED, CONFORMS TO 2004 SPECIFICATIONS |

NEW JERSEY TURNPIKE AUTHORITY
NEW JERSEY TURNPIKE

HANDRAIL AND GRATING DETAILS

OFFICE OF THE CHIEF ENGINEER
WOODBRIDGE, NEW JERSEY

2004 STANDARD DRAWING SI-19

CONTRACT NO. SHEET NO. OF