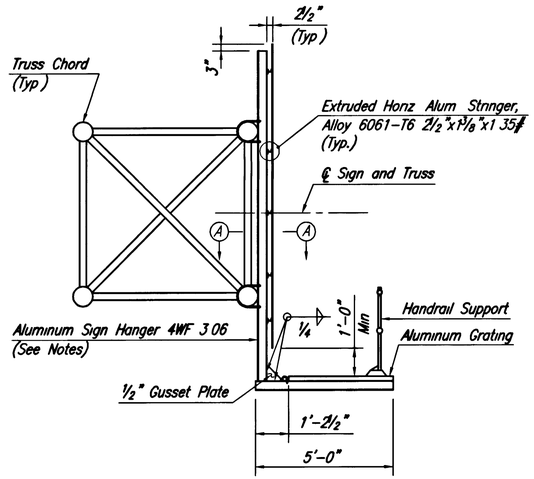

FIXED MESSAGE SIGN

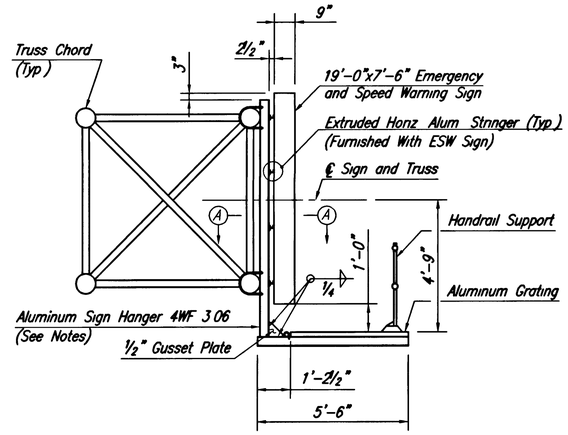

EMERGENCY SPEED WARNING SIGN

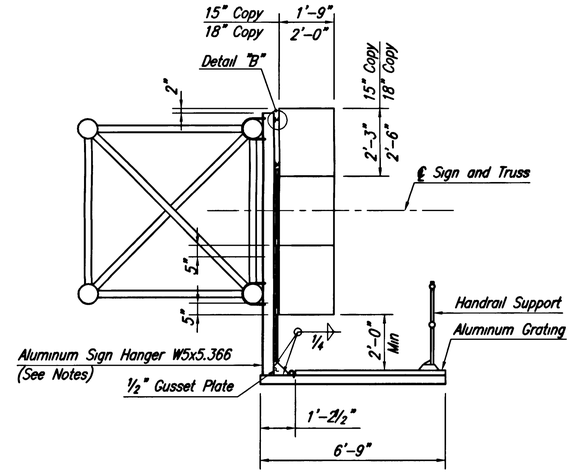

3 FACE DRUM

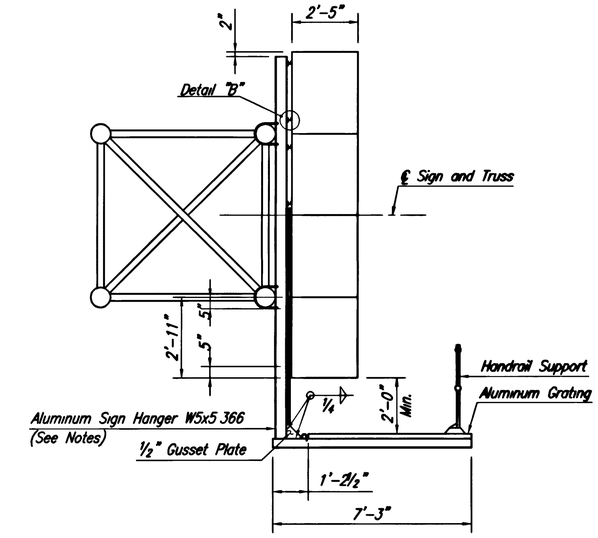

4 FACE DRUM

CHANGEABLE MESSAGE SIGNS

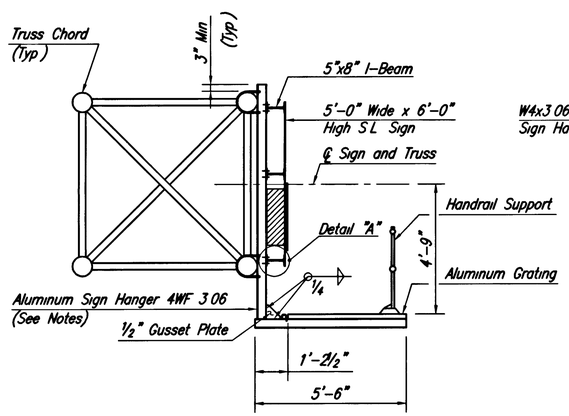

SPEED LIMIT SIGN

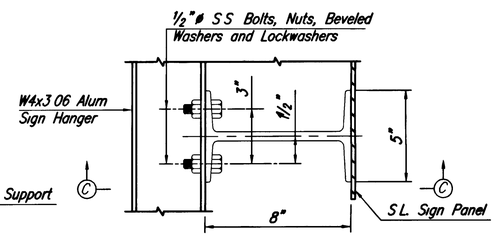

DETAIL "A"

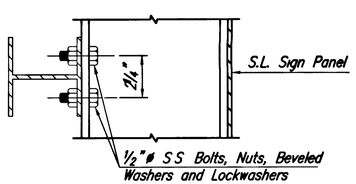

SECTION C-C

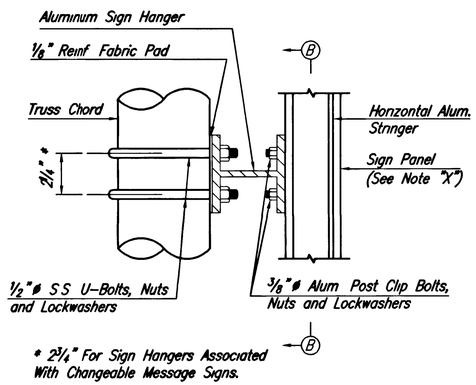

SECTION A-A

NOTE "X":

For sign panel to horizontal alum stringer attachment details, see Standard Dwg SI-13

NOTES:

1. Sign support structures shall conform to Section 406.
2. For grating and handrail details, see Standard Drawing SI-19.
3. SS denotes stainless steel
4. Aluminum sign hangers shall be spaced 4'-6" max ** o.c.. The maximum grating cantilever as measured to the centerline of hanger shall be 2'-0"
5. Aluminum grating for span type sign structures shall extend over the full width of roadway plus shoulders and terminate two (2) feet from the centerline of each frame

** For changeable message sign hanger spacing, see Standard Drawing SI-25

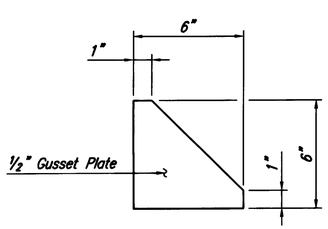

GUSSET PLATE DETAIL

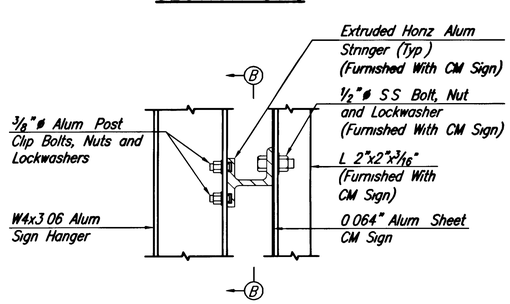

DETAIL "B"

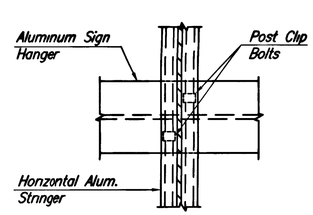

SECTION B-B

0 ½ 1 2 3 4

ORIGINAL SIZE IN INCHES

NEW JERSEY TURNPIKE AUTHORITY
NEW JERSEY TURNPIKE

TYPICAL OVERHEAD SIGN STRUCTURE SECTIONS

OFFICE OF THE CHIEF ENGINEER
WOODBRIDGE, NEW JERSEY

2004 STANDARD DRAWING SI-20

APP	NO	DATE	REVISION
		04/05	REISSUED, CONFORMS TO 2004 SPECIFICATIONS

CONTRACT NO. SHEET NO. OF