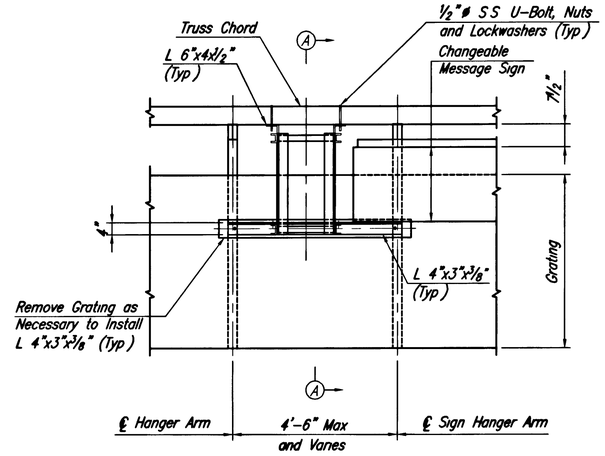

PLAN

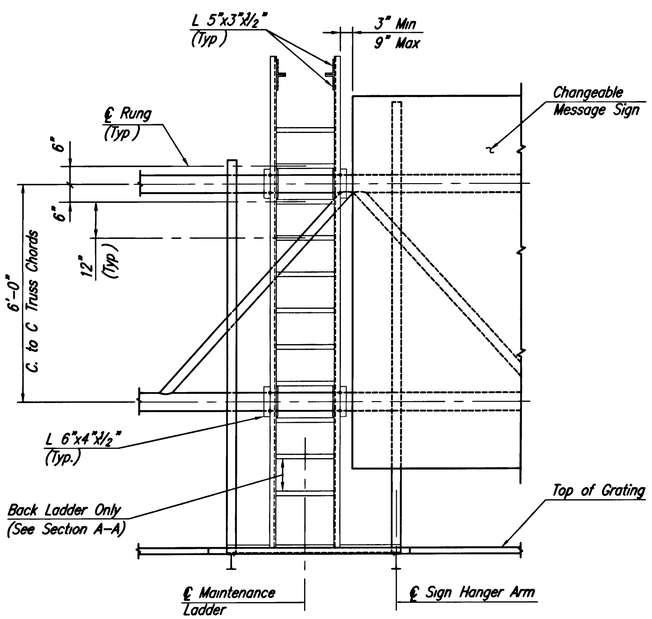

ELEVATION

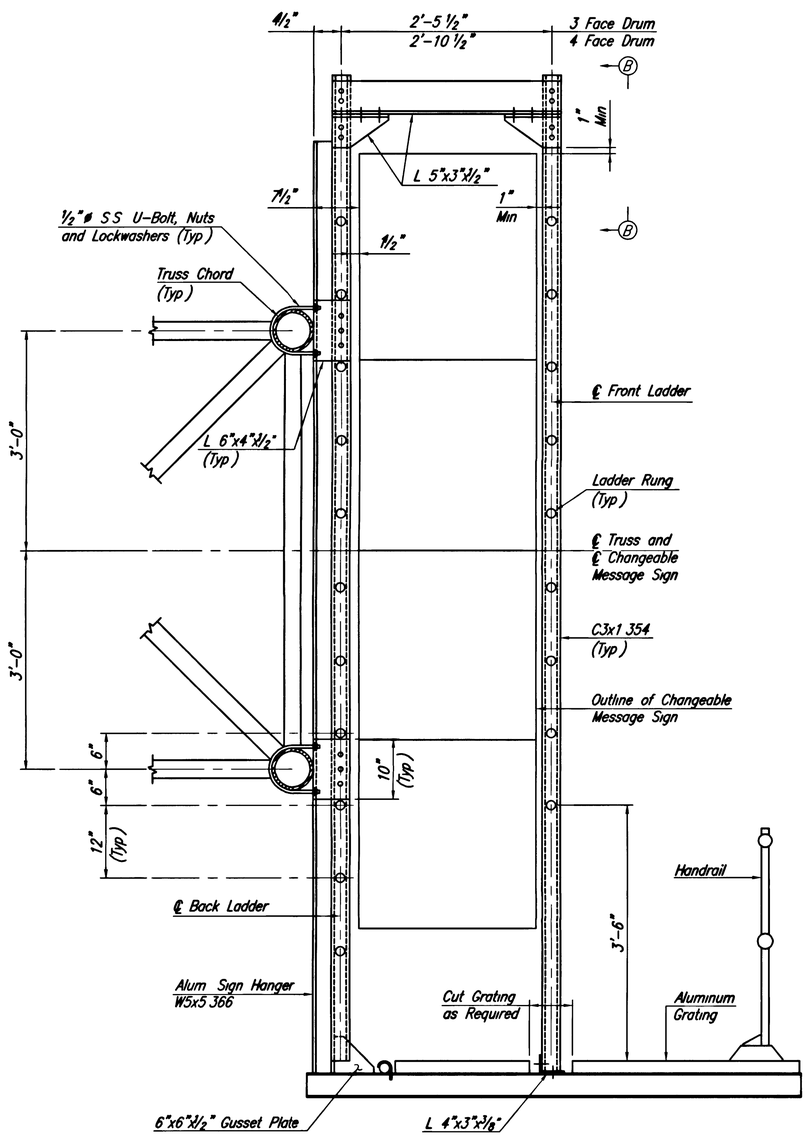

SECTION A-A

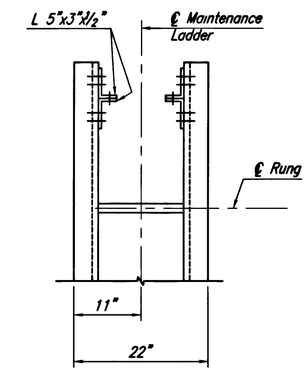

VIEW B-B

NOTES:

1. Sign support structures shall conform to Section 406.
2. All bolts, nuts and washers shall be 1/2"ø stainless steel unless otherwise noted.
3. Maintenance ladders shall consist of 3/4"ø serrated aluminum rungs The ladder rungs shall be securely fastened to the side channels, either bolted or welded in a manner to be approved by the Engineer

0 1/2 1 2 3 4
ORIGINAL SIZE IN INCHES

NEW JERSEY TURNPIKE AUTHORITY
NEW JERSEY TURNPIKE

MAINTENANCE LADDER INSTALLATION DETAILS

APP	NO	DATE	REVISION
		04/05	REISSUED, CONFORMS TO 2004 SPECIFICATIONS

OFFICE OF THE CHIEF ENGINEER
WOODBRIDGE, NEW JERSEY

2004 STANDARD DRAWING SI-21

CONTRACT NO. SHEET NO. OF