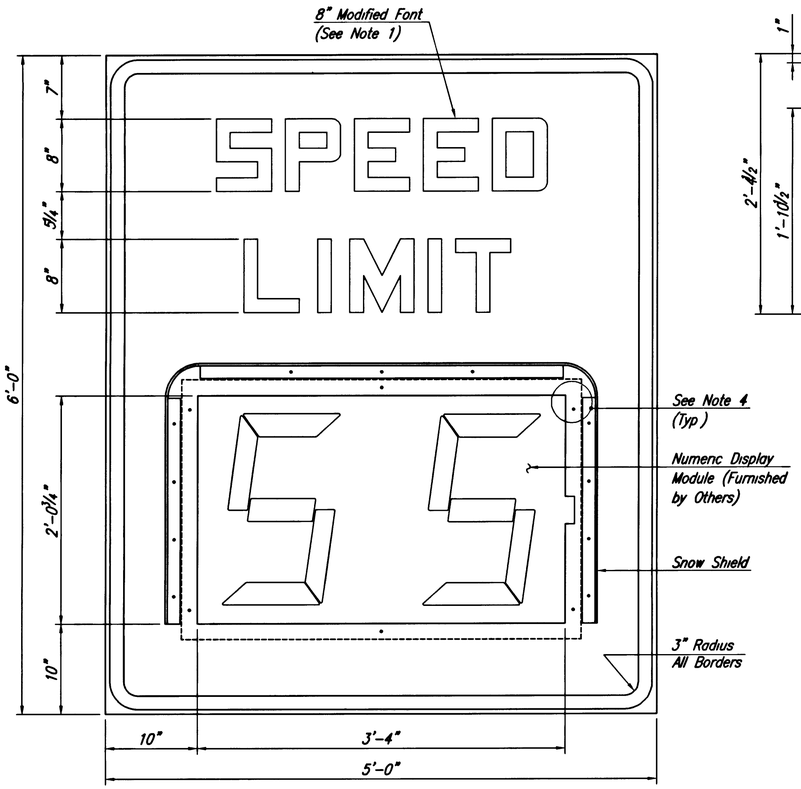

FRONT VIEW

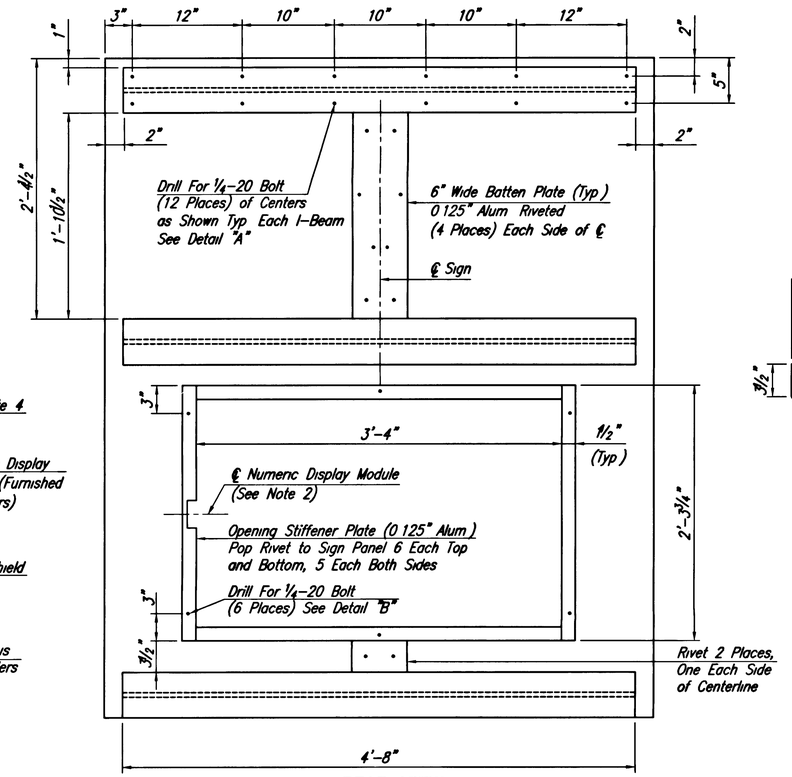

REAR VIEW

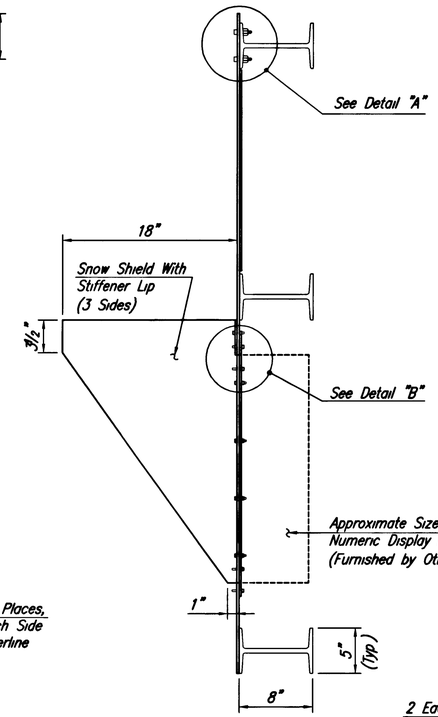

SIDE VIEW

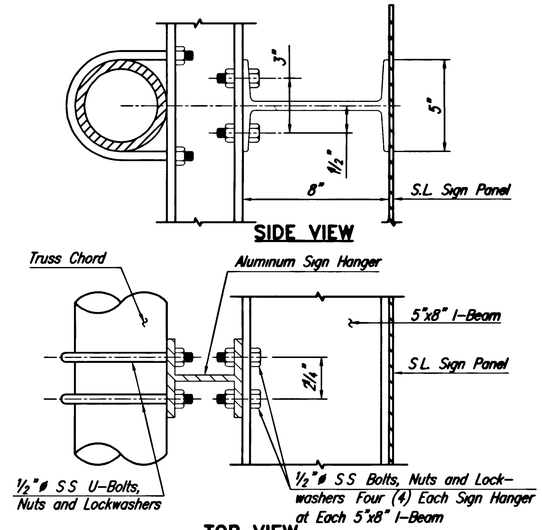

SIDE VIEW

TOP VIEW

SL SIGN ATTACHMENT DETAIL
FOR OVERHEAD LOCATIONS

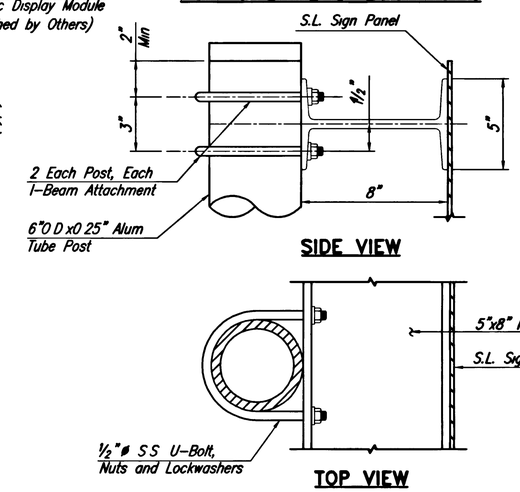

SIDE VIEW

TOP VIEW

SL SIGN ATTACHMENT DETAIL
FOR GROUND MOUNTED LOCATIONS

NEW SPEED LIMIT PANEL

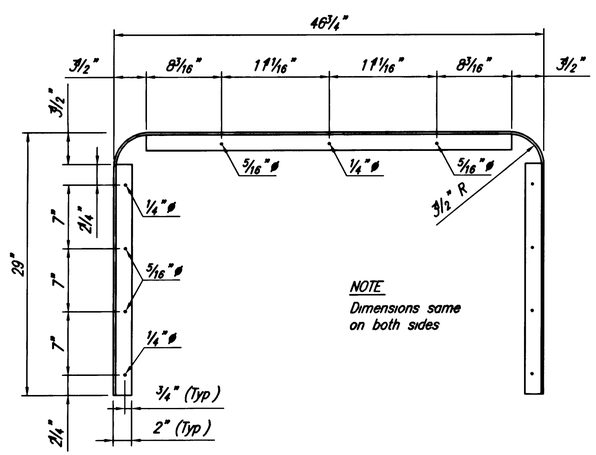

FRONT VIEW – SNOW SHIELD

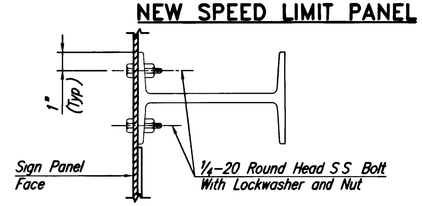

DETAIL "A"

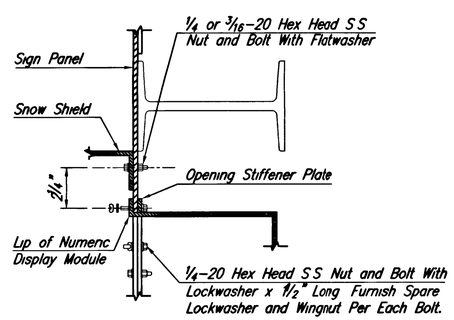

DETAIL "B"

NOTES:

1. The speed limit sign panel shall be White High Intensity Scotch-Lite on 0 125" aluminum panel Legend and border shall be Black Scotch-Cal
2. The sign panel opening shown is based upon the approximate size of the numeric display module It shall be the Contractor's responsibility to obtain a sample of the actual numeric display module (to be furnished by the Authority) prior to fabrication of the sign panels.
3. Snow shield shall be 0.125" thick aluminum with flat black finish
4. Snow shield may be modified as approved by the Engineer to avoid interference with the numeric module assembly
5. Sign support structures shall conform to Section 406

0 ½ 1 2 3 4
ORIGINAL SIZE IN INCHES

APP	NO	DATE	REVISION
		04/05	REISSUED CONFORMS TO 2004 SPECIFICATIONS

NEW JERSEY TURNPIKE AUTHORITY
NEW JERSEY TURNPIKE

SPEED LIMIT SIGN
INSTALLATION DETAILS

OFFICE OF THE CHIEF ENGINEER
WOODBRIDGE, NEW JERSEY

2004 STANDARD DRAWING SI-23

CONTRACT NO. SHEET NO. OF