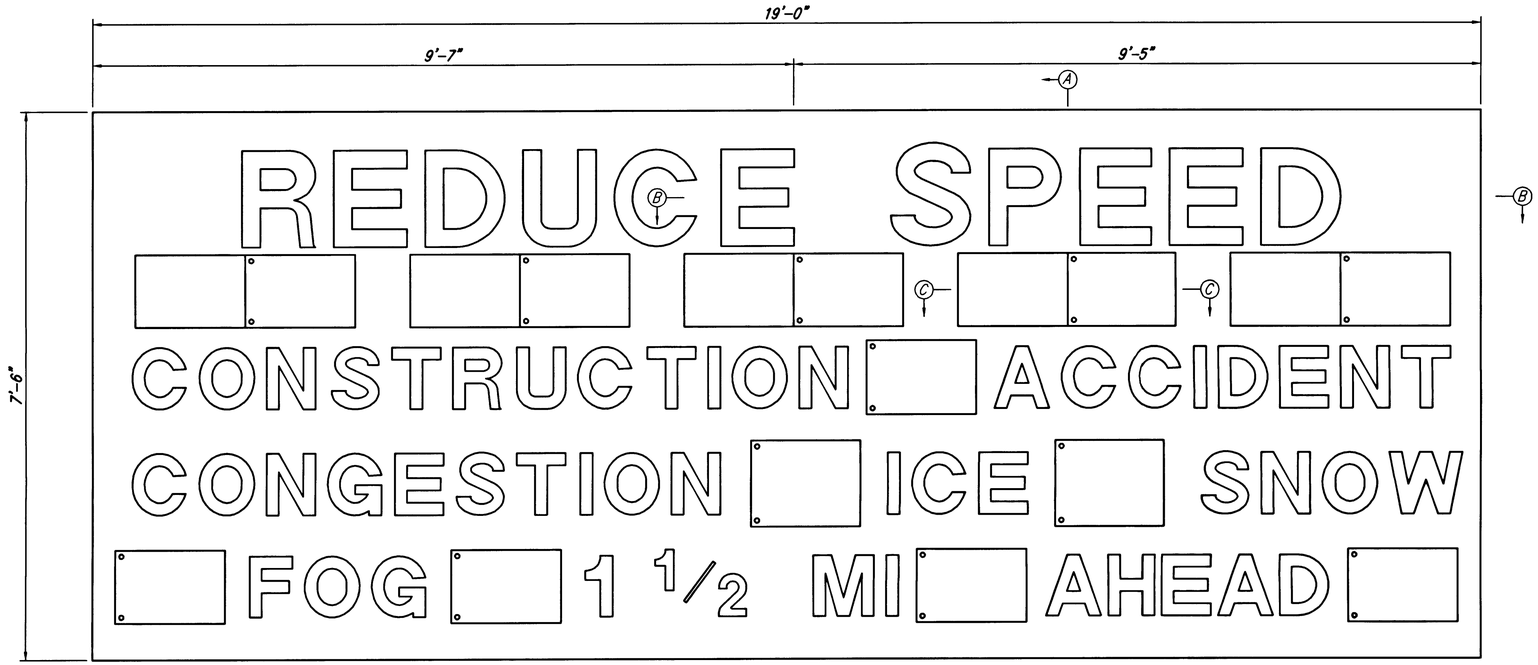

FRONT ELEVATION

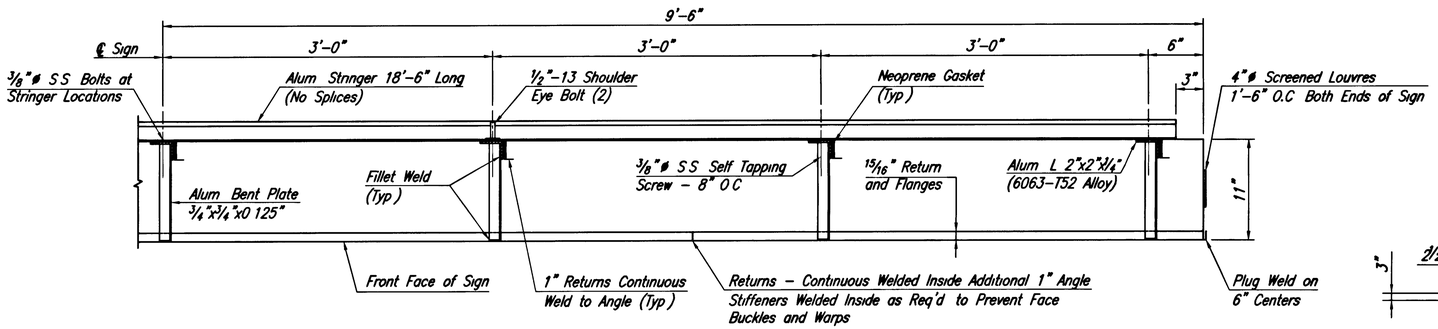

SECTION B-B

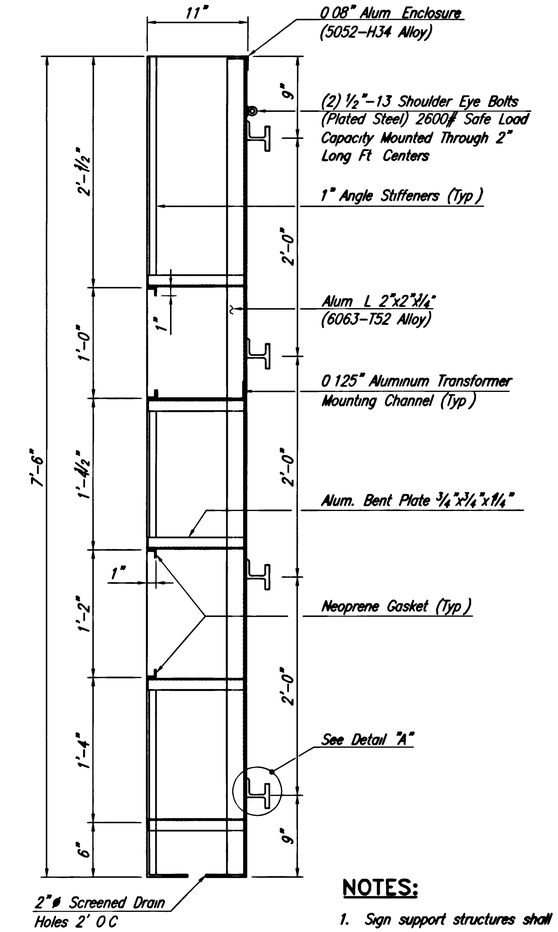

SECTION A-A

NOTES:

1. Sign support structures shall conform to Section 406.
2. All material shall be aluminum alloy 6061-T6 unless noted otherwise.
3. SS denotes stainless steel
4. The emergency speed warning sign as shown to be furnished by others.

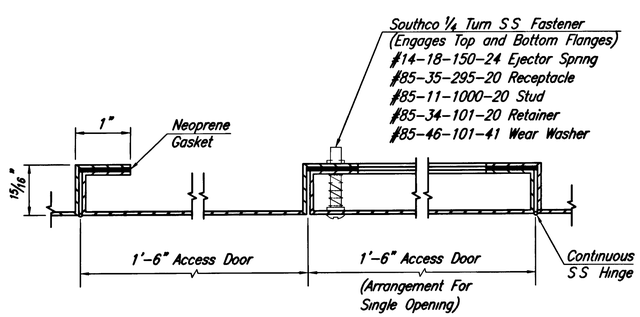

SECTION C-C

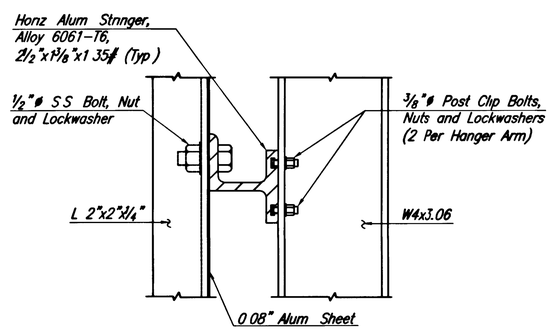

DETAIL "A"

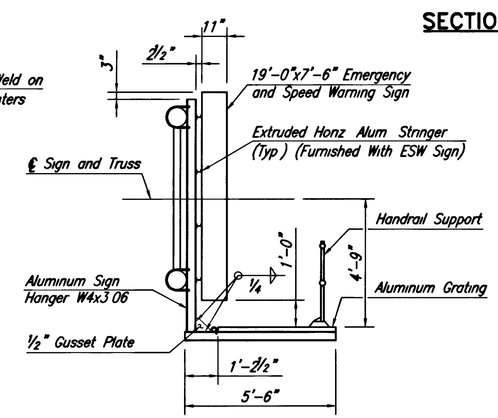

SECTION THRU BRIDGE MOUNTED EMERGENCY SPEED WARNING SIGN

0 1/2 1 2 3 4

ORIGINAL SIZE IN INCHES

APP	NO	DATE	REVISION
		04/05	REISSUED CONFORMS TO 2004 SPECIFICATIONS

NEW JERSEY TURNPIKE AUTHORITY
NEW JERSEY TURNPIKE

EMERGENCY SPEED WARNING SIGN

OFFICE OF THE CHIEF ENGINEER
WOODBRIDGE, NEW JERSEY

2004 STANDARD DRAWING SI-24

CONTRACT NO. SHEET NO. OF