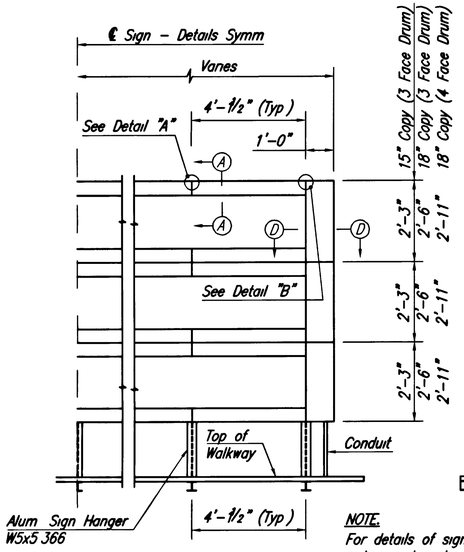

NOTE:
For details of sign hanger, railing and grating installation, see Std Dwgs SI-19 and SI-20

HALF ELEVATION

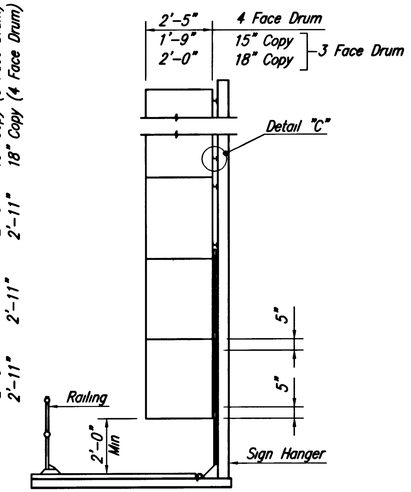

SIDE VIEW

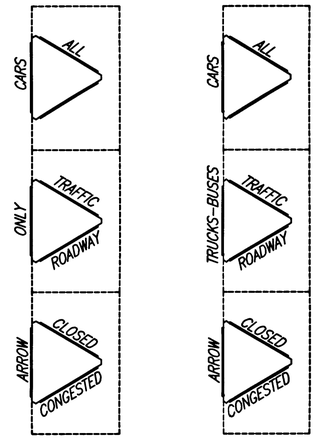

DRUM FACE MESSAGES

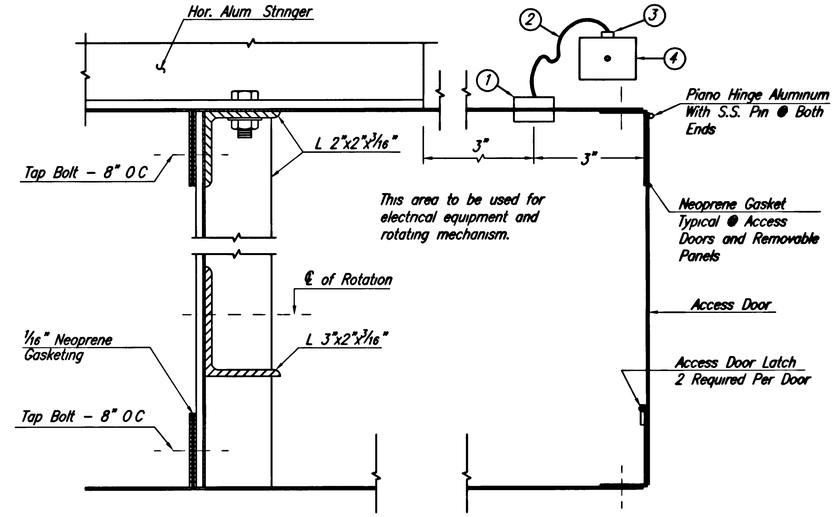

SECTION D–D

1. Sealing Gland
2. 4 Wire Tyrex Cord
3. 4 Wire Twist Lock Plug With Seal Tight Rubber Cover
4. FD Box With Twist Lock Weatherproof Receptacle

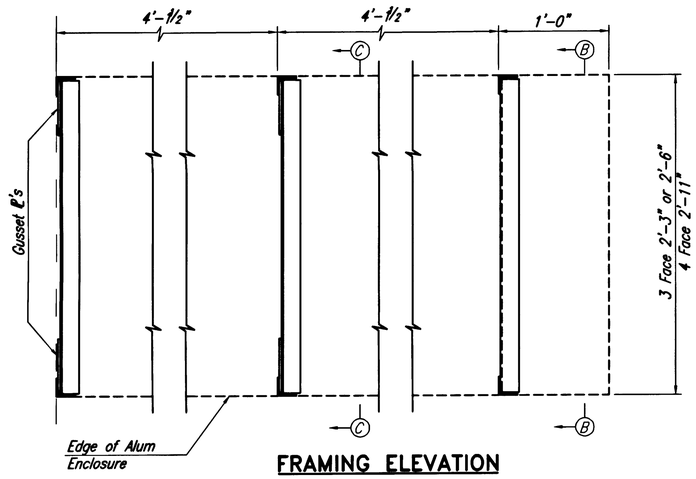

FRAMING ELEVATION

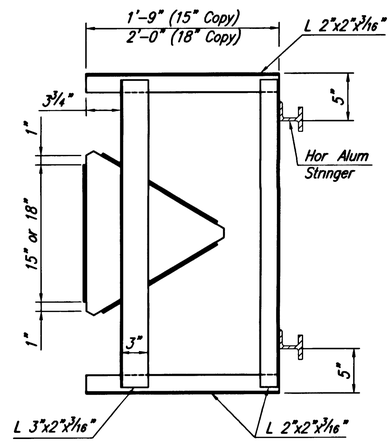

SECTION B–B
(See also Section A–A)

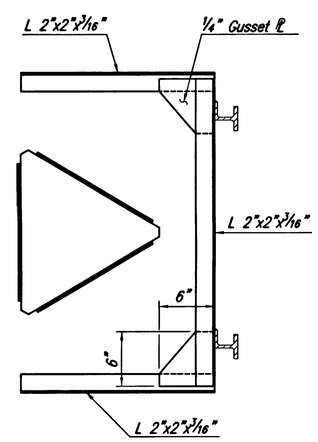

SECTION C–C
(See also Section A–A)

3 FACE DRUM

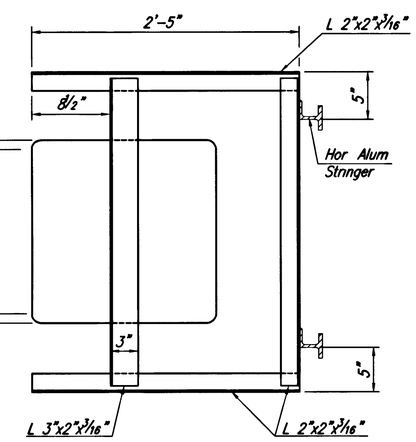

SECTION B–B
(See also Section A–A)

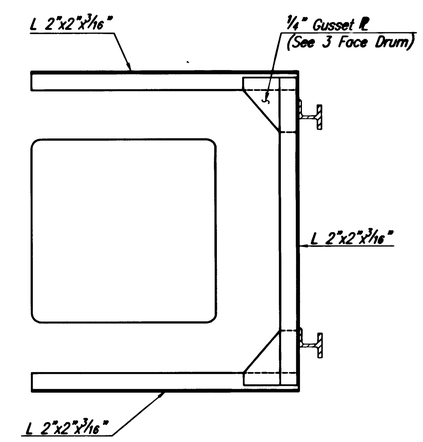

SECTION C–C
(See also Section A–A)

4 FACE DRUM

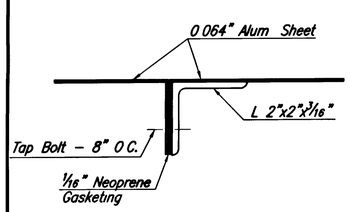

DETAIL "A"

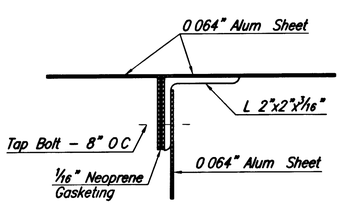

DETAIL "B"

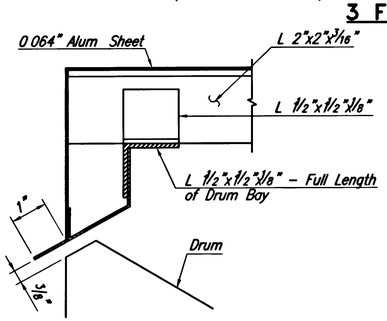

SECTION A–A

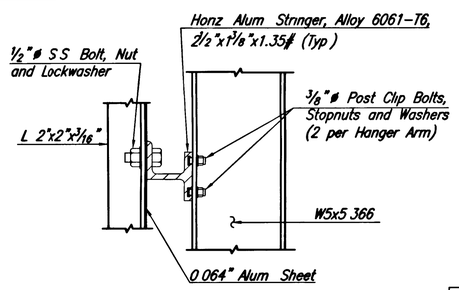

DETAIL "C"

0 ½ 1 2 3 4
ORIGINAL SIZE IN INCHES

NEW JERSEY TURNPIKE AUTHORITY
NEW JERSEY TURNPIKE

CHANGEABLE MESSAGE SIGN

APP	NO	DATE	REVISION
		04/05	REISSUED, CONFORMS TO 2004 SPECIFICATIONS

OFFICE OF THE CHIEF ENGINEER
WOODBRIDGE, NEW JERSEY

2004 STANDARD DRAWING SI–25

CONTRACT NO. SHEET NO. OF