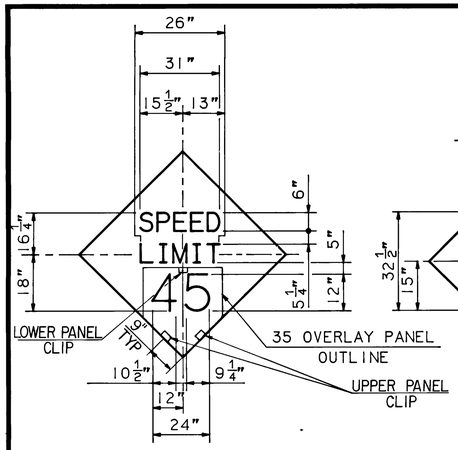

TE-592
(SL45),(SL35)

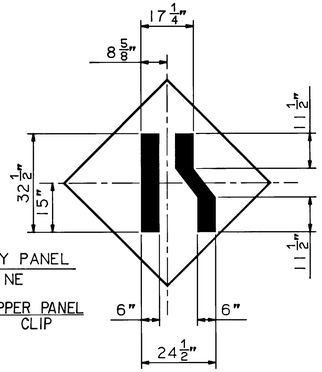

TE-593
(MLS)

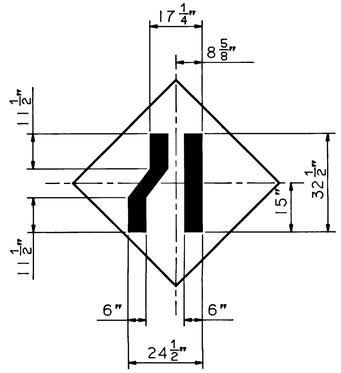

TE-593
(MRS)

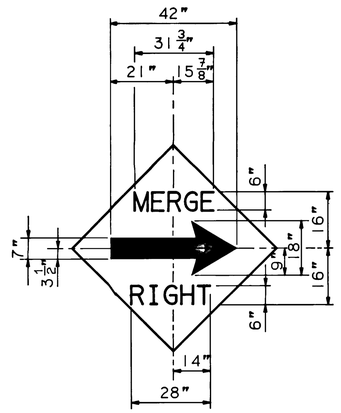

TE-594
(MRA)

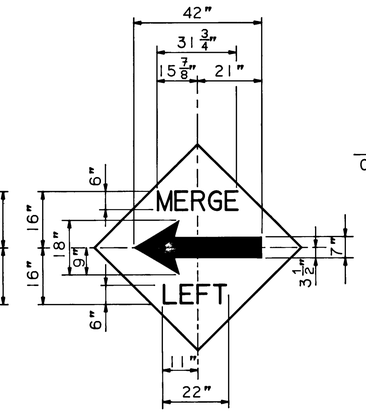

TE-594
(MLA)

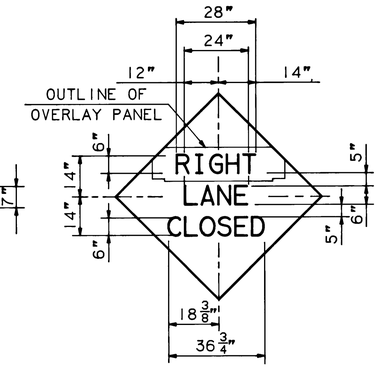

TE-595
(RLCO)

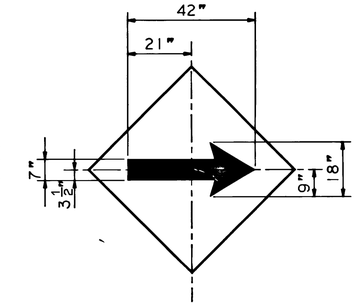

TE-598
(BA)

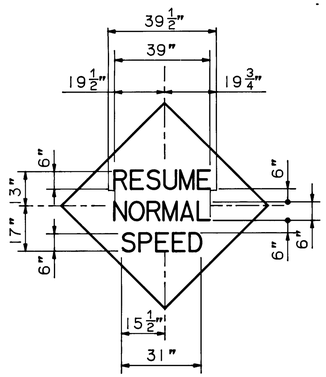

TE-599
(RNS)

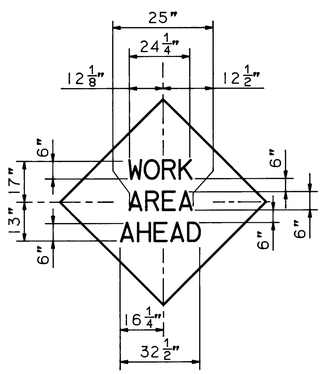

TE-602
(WA)

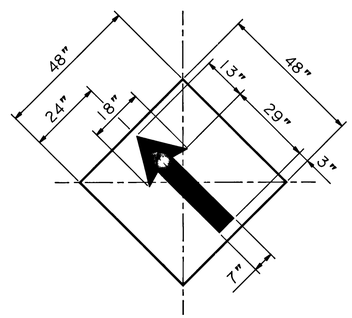

TE603

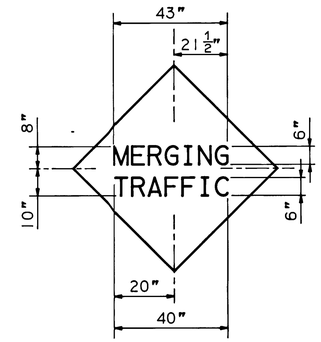

TE-604
(MT)

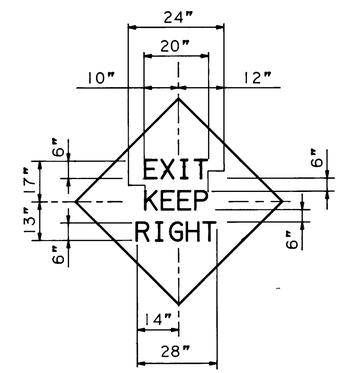

TE-605

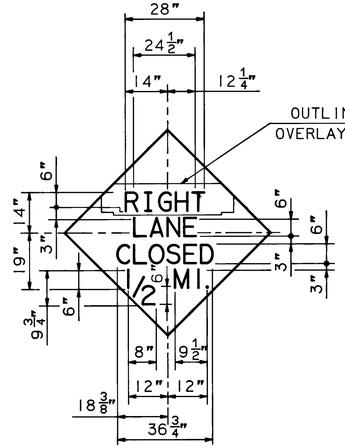

TE-606
(RLC-$\frac{1}{2}$)

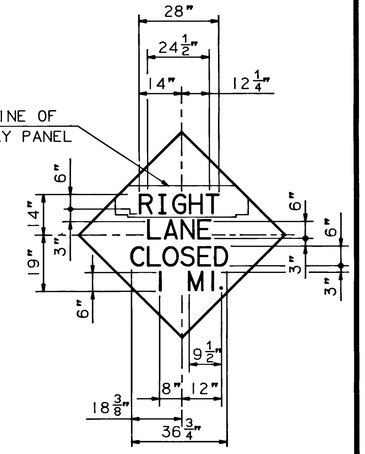

TE-606
(RLC-1)

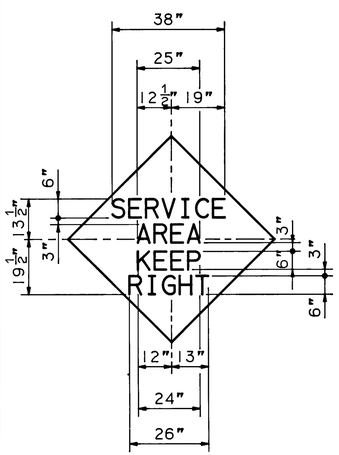

TE-607

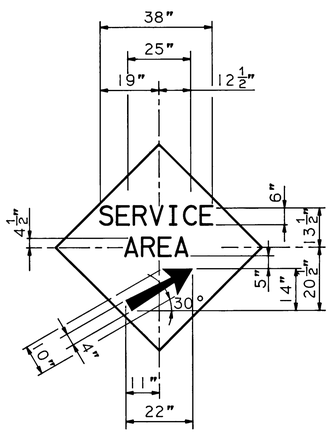

TE-608

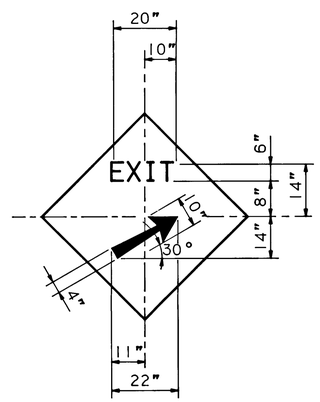

TE-609

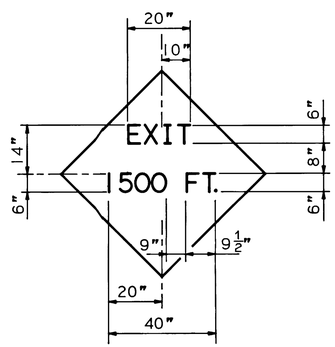

TE-610

GENERAL NOTES:

1. ALL SIGN PANELS SHALL BE 4' X 4' FLAT ALUMINUM SHEETS.
2. USE 1" BLACK BORDER FLUSH WITH EDGE OF SIGN
3. ROUND CORNERS TO 1" RADIUS.
4. SIGN LETTERING SHALL BE SERIES E-MODIFIED.
5. FOR OVERLAY PANELS AND PANEL CLIP DETAILS, SEE STANDARD DRAWING TP-2.

0 $\frac{1}{2}$ 1 2 3 4
ORIGINAL SIZE IN INCHES

APP	NO	DATE	REVISION
	1	5/88	MINOR REVISIONS
		3/87	ORIGINAL DRAWING

NEW JERSEY TURNPIKE AUTHORITY
NEW JERSEY TURNPIKE

TRAFFIC PROTECTION
SIGN DETAILS - I

OFFICE OF THE CHIEF ENGINEER
NEW BRUNSWICK NEW JERSEY

1987 STANDARD
DRAWING TP-1

CONTRACT NO. SHEET NO. OF