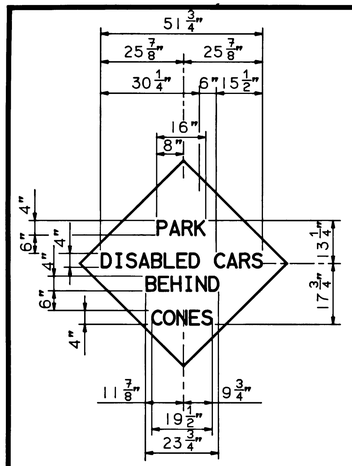

TE-611
(PD)

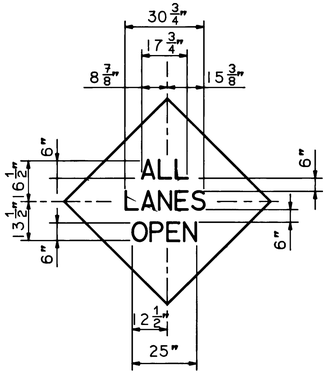

TE-613
(ALO)

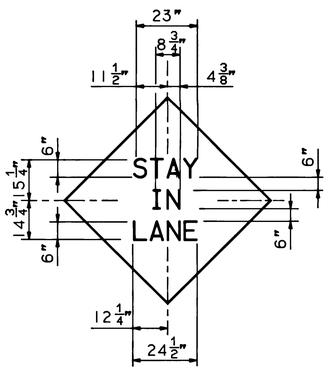

TE-614
(SIL)

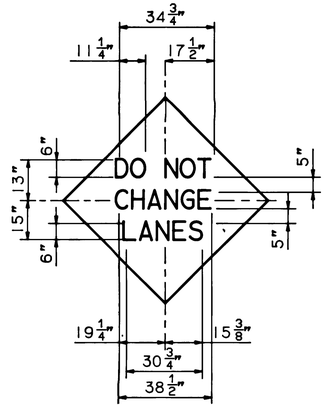

TE-615
(DNC)

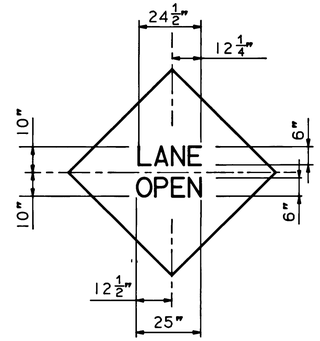

TE-616
(LO)

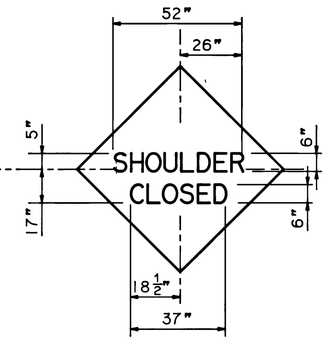

TE-1062
(SC)

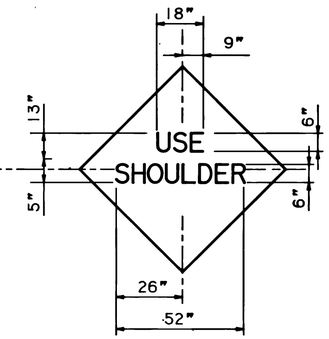

TE-1063
(US)

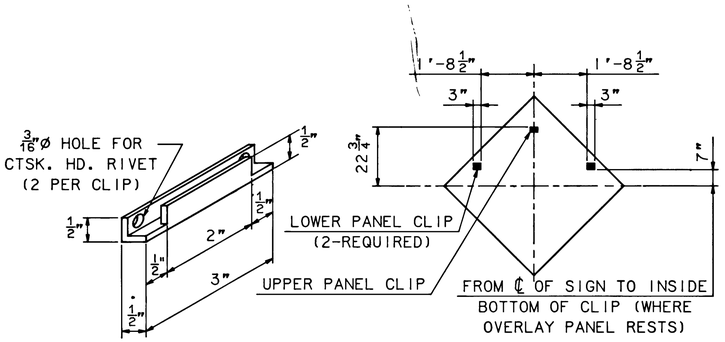

LOWER PANEL CLIP

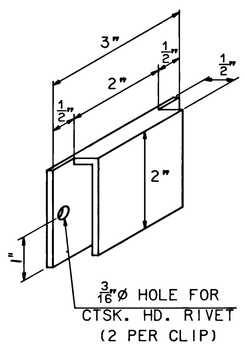

UPPER PANEL CLIP

PANEL CLIP DETAILS
FOR LANE CLOSING SIGNS

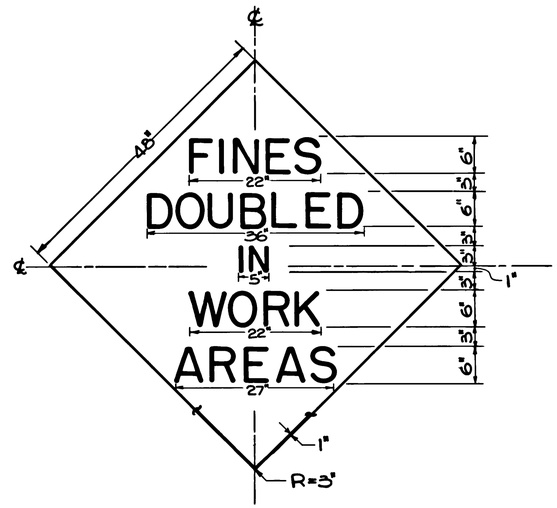

TE-955
DATE: 5/25/93

NOTES

1. USE BLACK SCOTCHCAL LETTERS (SERIES D) & BORDER ON AN ORANGE HIGH INTENSITY SCOTCHLITE BACKGROUND.
2. THE HORIZONTAL LAYOUT OF THE TEXT IS TO BE SYMMETRICAL WITH THE VERTICAL CENTER LINE OF THE SIGN PANEL.

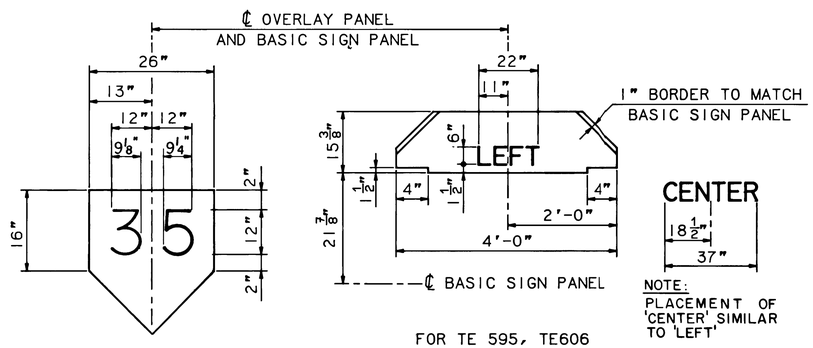

FOR TE-592

FOR TE 595, TE606

NOTE:
PLACEMENT OF 'CENTER' SIMILAR TO 'LEFT'

OVERLAY PANELS

NOTES:

1. FOR GENERAL NOTES, SEE STANDARD DRAWING TP-1.

0 ½ 1 2 3 4
ORIGINAL SIZE IN INCHES

APP.	NO.	DATE	REVISION
	2	10/97	ADDED SIGN DETAIL TE-955
	1	5/88	MINOR REVISIONS
		3/87	ORIGINAL DRAWING

NEW JERSEY TURNPIKE AUTHORITY
NEW JERSEY TURNPIKE

TRAFFIC PROTECTION
SIGN DETAILS - II

OFFICE OF THE CHIEF ENGINEER
NEW BRUNSWICK NEW JERSEY

1987 STANDARD
DRAWING TP-2

CONTRACT NO. SHEET NO. OF