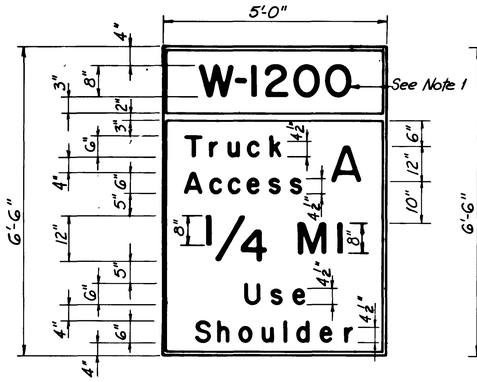

SIGN NO. 19
(TA¼)

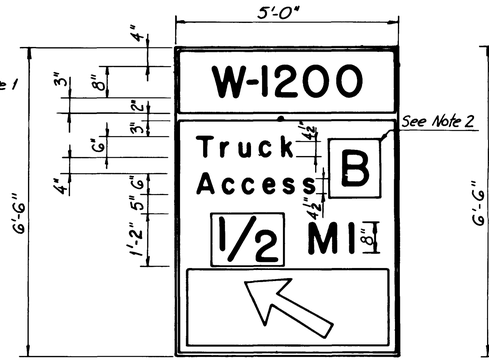

SIGN NO. 19A
(SIGN NO.19 WITH OVERLAY PANELS 'AL', '0½' & '0B')
(TA¼)

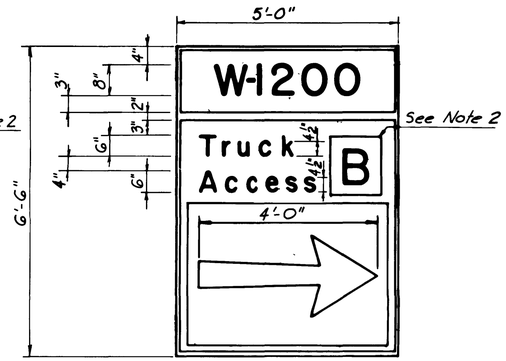

SIGN NO. 19B
(SIGN NO.19 WITH OVERLAY PANELS 'ATA' & '0B')
(TA¼)

Notes:
1. Use appropriate contract numbers
2 Use Overlay Panels '0B' and '0C' as required for other access points in use simultaneously with Point A.

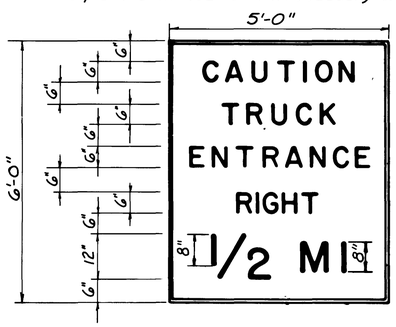

SIGN NO. 20R
(CTE½)

When Sign No. 20L is required use overlay 'L' to cover 'Right' and overlay '01' to cover '2'.

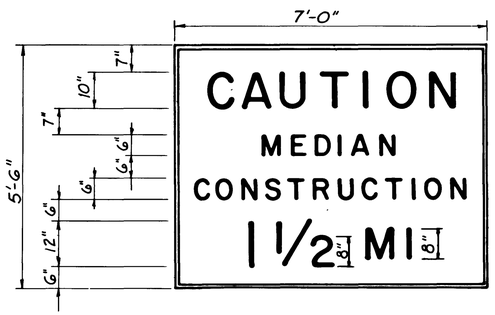

SIGN NO.21
(CMC)

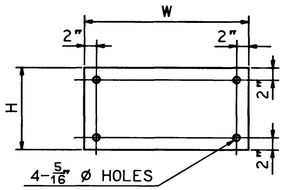

OVERLAY PANEL
BOLT LOCATION

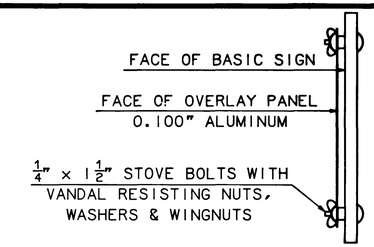

OVERLAY PANEL CONNECTION

NOTE: DRILL & ATTACH FASTENERS TO ALL 19, 19A, 19B AND 20 SIGNS FOR APPROPRIATE PANELS.

GENERAL NOTES:

1. ALL SIGN PANELS SHALL BE FLAT ALUMINUM SHEETS.
2. ROUND CORNERS TO 1" RADIUS.

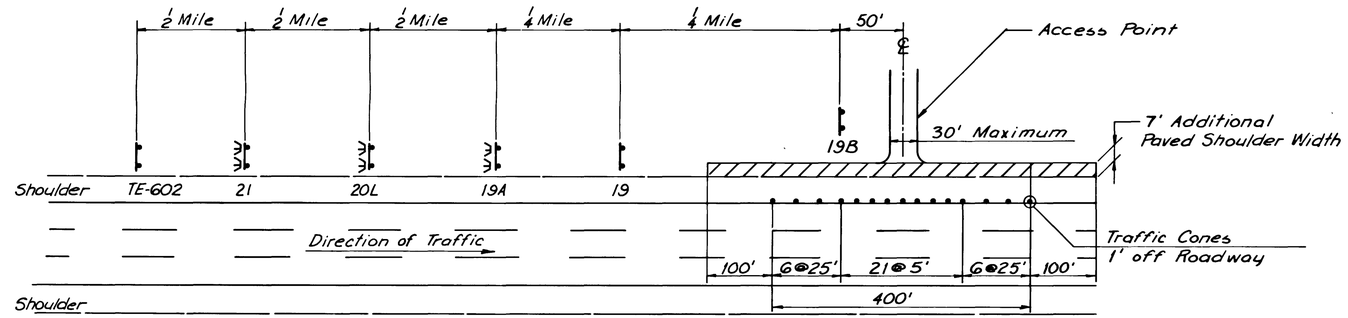

NOTES:

SIGN NOS. 19, 19A, 19B, 20, 21 AND OVERLAY PANEL "L" SHALL USE 3M "SCOTCHLITE" BRAND HIGH INTENSITY GRADE REFELECTIVE SHEETING, YELLOW 2871 OR 3871. THE SIGN LETTERING AND BORDER SHALL BE AS SPECIFIED IN SUBSECTION 920.06.

OVERLAY PANELS SHALL USE 3M "SCOTCHLITE" BRAND HIGH INTENSITY REFLECTIVE SHEETING, SILVER 2870 OR 3870. THE SIGN LETTERING SHALL BE AS SPECIFIED IN SUBSECTION 920.06.

OVERLAY PANELS SHALL NOT BE BORDERED.

OVERLAY PANELS

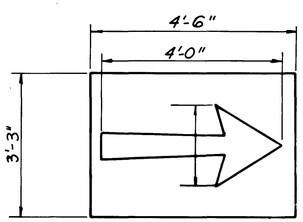

ATA

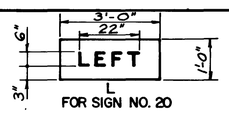

L
FOR SIGN NO. 20

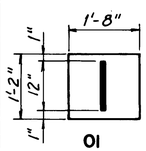

01
FOR SIGN NO. 20

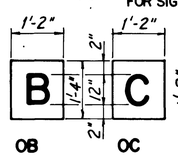

0B OC
FOR SIGNS 19, 19A, 19B

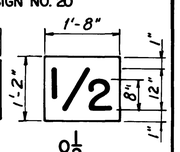

0½
FOR SIGN NO. 19A

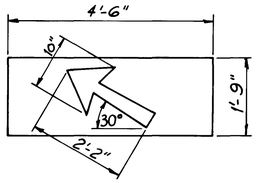

AL

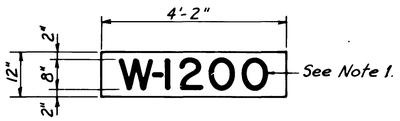

TAW
FOR SIGNS 19, 19A, 19B

Note:
Sign TE-602 shall be as shown on Std. Dwg. TP-1.

TO MEDIAN AREA

LEGEND:
Warning Sign - Numeral indicates Type of Sign
Flashing Light - To be mounted on top of Stand and is to be in operation whenever sign is in use.

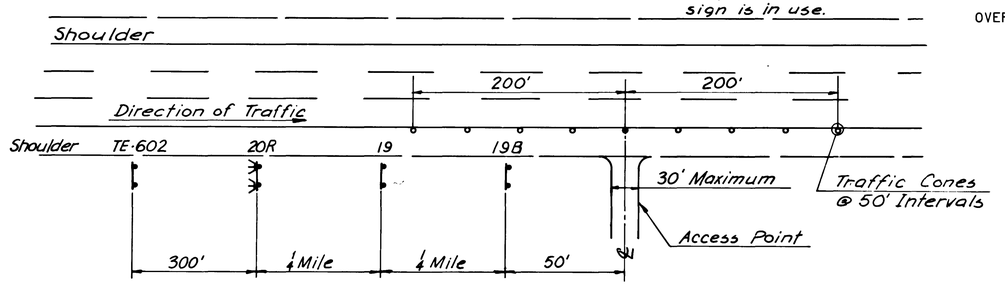

OFF RIGHT SHOULDER

TYPICAL SIGNING FOR TRUCK ACCESS

0 ½ 1 2 3 4

ORIGINAL SIZE IN INCHES

APP.	NO.	DATE	REVISION
	1	9/87	Minor Revisions
		3/87	Reissued; Conforms to 1987 Specs.

NEW JERSEY TURNPIKE AUTHORITY
NEW JERSEY TURNPIKE

TRUCK ACCESS SIGN DETAILS

OFFICE OF THE CHIEF ENGINEER
NEW BRUNSWICK NEW JERSEY

1987 STANDARD DRAWING TP-4

CONTRACT NO. SHEET NO. OF