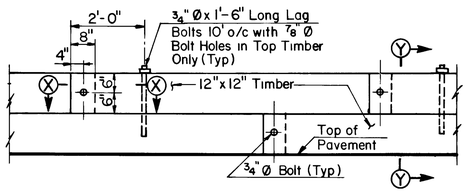

ELEVATION
1/2" = 1'-0"

NOTE
Upper and Lower Timbers to have staggered joints and to be bolted together at 10ft Centers

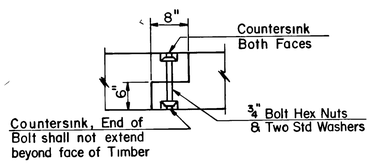

SECTION X-X
3/4" = 1'-0"

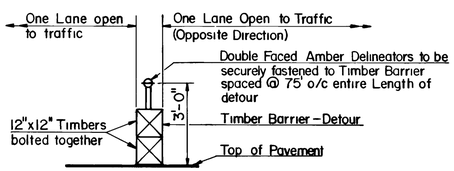

SECTION Y-Y
3/8" = 1'-0"

TIMBER BARRIER-DETOUR

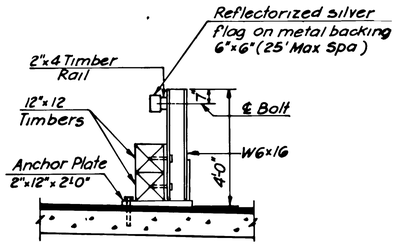

END VIEW

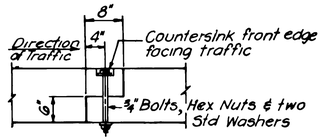

TIMBER SPLICE DETAIL

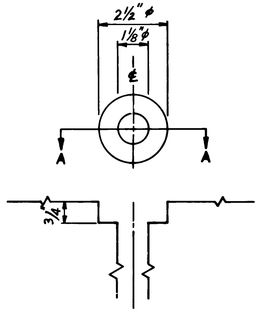

SECTION A-A

COUNTERSINK DETAIL

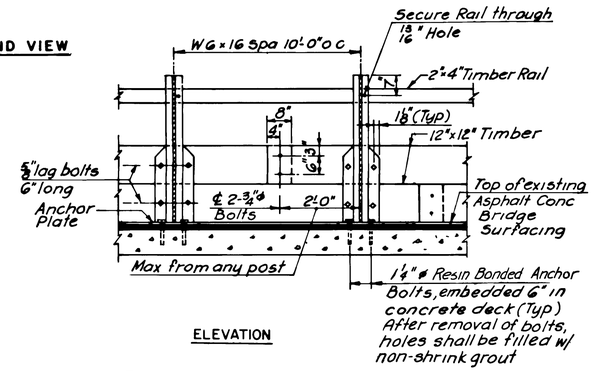

ELEVATION

TIMBER BARRIER-BRIDGE

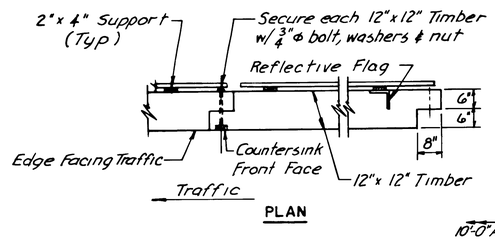

PLAN

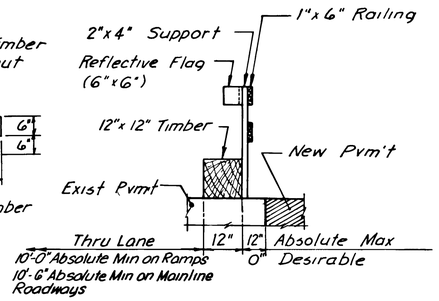

END VIEW

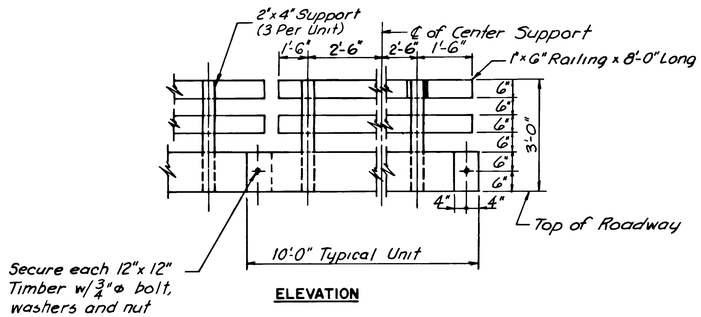

ELEVATION

TIMBER BARRIER

0 1/2 1 2 3 4

ORIGINAL SIZE IN INCHES

APP	NO	DATE	REVISION
	3	12/96	DELETED BARRIER AT DECK REPLACEMENT AREA
	2	9-94	REVISED LENGTH OF TIMBER BARRIER FENCE
	1	3/88	ADDED TIMBER BARRIER-DETOUR
		3/87	REISSUED, CONFORMS TO 1987 SPECS

NEW JERSEY TURNPIKE AUTHORITY
NEW JERSEY TURNPIKE

TIMBER BARRIER

OFFICE OF THE CHIEF ENGINEER
NEW BRUNSWICK NEW JERSEY

1987 STANDARD DRAWING TP-6

CONTRACT NO. SHEET NO. OF