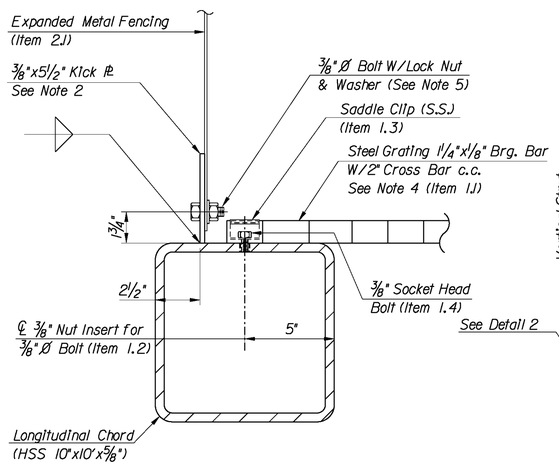

DETAIL 2
(STEEL GRATING ATTACHMENT DETAIL)
3" = 1'-0"

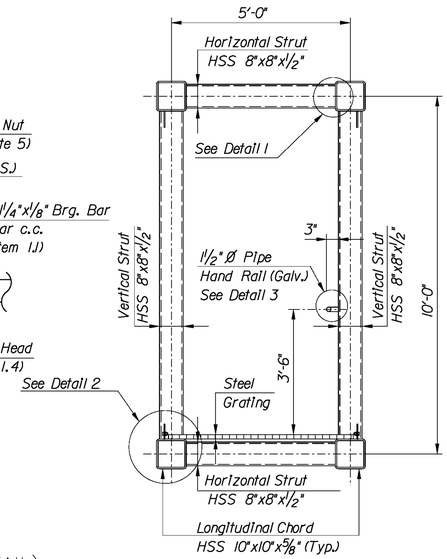

SECTION B–B
1/2" = 1'-0"

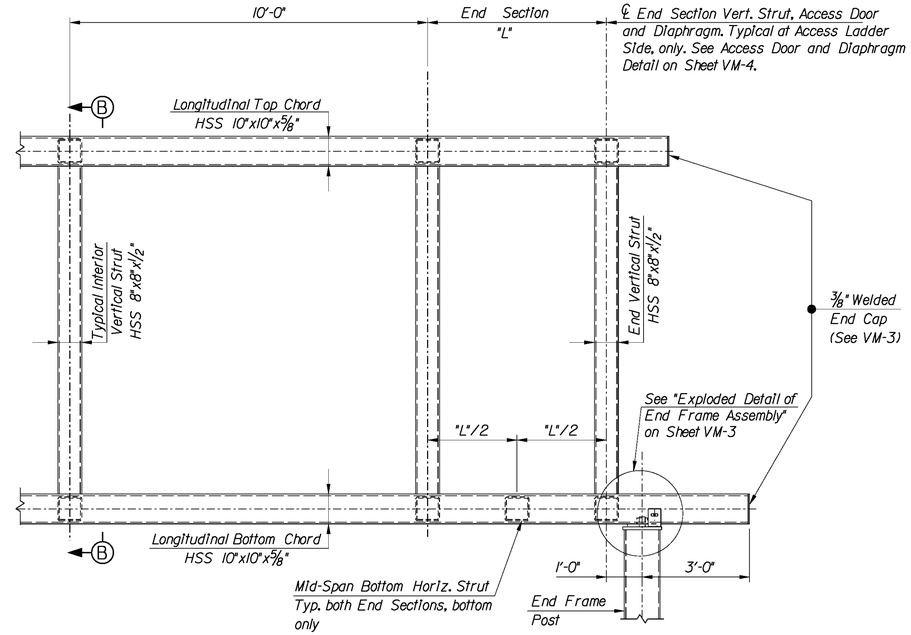

ELEVATION VIEW OF TYPICAL TRUSS END
(Fence, Grating, Handrail and Signs Not Shown for clarity)
1/2" = 1'-0"

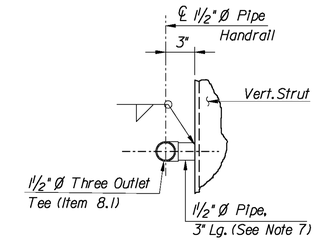

DETAIL 3
1 1/2" = 1'-0"

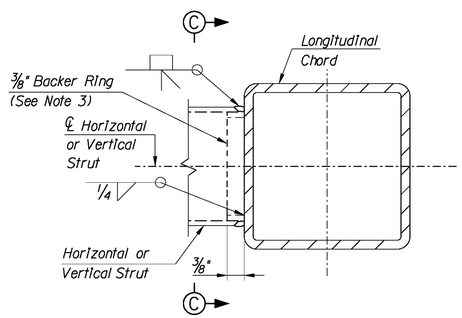

DETAIL 1
(TYPICAL TRUSS WELDED CONNECTION)
N.T.S.

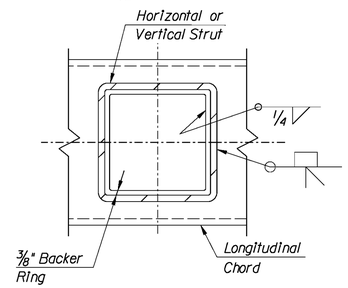

SECTION C–C
N.T.S.

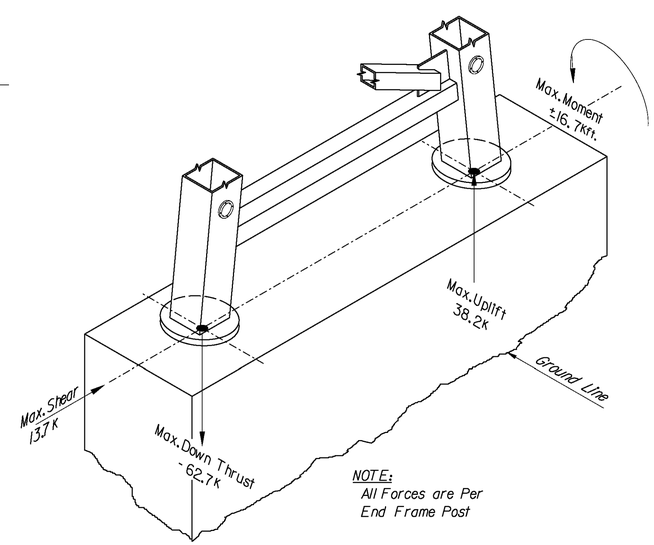

FOUNDATION LOADING DIAGRAM
N.T.S.

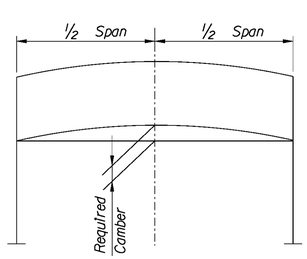

CAMBER DIAGRAM
N.T.S.

CAMBER NOTE:

Camber shall be obtained by increasing the lengths of the top chords and decreasing the lengths of the bottom chord. The required camber shall be as provided in Table A on this Sheet. No force shall be applied in providing camber. An alternate method of obtaining camber may be used as approved by the Engineer.

TABLE A			
STRUCTURE SPAN LENGTH	END SECTION "L"	"N" SPACES (10'-0")	CAMBER (IN.)
60'	4'-0"	1	1 1/4"
65'	6'-6"	1	1 1/2"
70'	9'-0"	1	1 3/4"
75'	11'-6"	1	2"
80'	4'-0"	2	2"
85'	6'-6"	2	2 1/4"

LOADING AND DESIGN NOTES:

1. These dedicated Sign Structure Standards are intended for the sole purpose of supporting the Variable Message Sign (VMS), Variable Speed Limit Sign (VSLS), and miscellaneous appurtenances shown herein for spans up to and including 85'-0". No additional sign area or appurtenances may be used in conjunction with these Standard Drawings without the express written consent of the Authority.
2. Wind forces on Variable Message Sign and Variable Speed Limit Sign have been determined using a Drag Coefficient (Cd) of 1.2.
3. Expanded Metal Fencing shown in these Standard Drawings has an open area ratio of 75%.
4. Steel Grating shown in these Standard Drawings has an open area ratio of 81%.
5. The sign support structure has been designed to the requirements of AASHTO Fatigue Category II
6. See Design Manual Exhibits 2-405 through 2-411 for required pedestal offset and protection.

NOTES:

1. Chords and Struts of the Truss are to be used as Routing Conduits for VMS/VSLS power and control wiring. Specific chord to strut connections will require wire pull holes. Specific struts will require hand holes to facilitate the installation of the associated wiring through the Wire Pull Holes. See Sheet VM-7 for locations and details of wire pull holes and hand holes.
2. For fence attachment details, see Sheet VM-3.
3. Full penetration welded chord to strut connection with the backer ring attached to the chord with a continuous fillet weld around the interior face of the ring. The thickness of the backing ring shall not exceed 3/8".
4. Steel grating shall be coped to fit around vertical strut member, as required.
5. Washer shall be oversize fender-washer, Min. O. D. = 1.625", Min. Thickness = 0.056"
6. For Item lists, see Sheet VM-10.
7. Pipe to be welded to Vertical Strut shall be of the same material as the Vertical Strut, as defined in note 3A on Sheet VM-1.

0 1/2 1 2 3 4
ORIGINAL SIZE IN INCHES

APP.	NO.	DATE	REVISION
	1	8/08	ORIGINAL DRAWING

NEW JERSEY TURNPIKE AUTHORITY

NEW JERSEY TURNPIKE

OVERHEAD SPAN VMS/VSLS SUPPORT STRUCTURES
TRUSS DETAILS

OFFICE OF THE CHIEF ENGINEER
NEW JERSEY TURNPIKE AUTHORITY
WOODBRIDGE NEW JERSEY

2008 STANDARD
DRAWING VM-2

CONTRACT NO. SHEET NO. OF

$TIME$
$FILE$

...\VM-2(Z).dgn 11/21/2008 10:05:01 AM