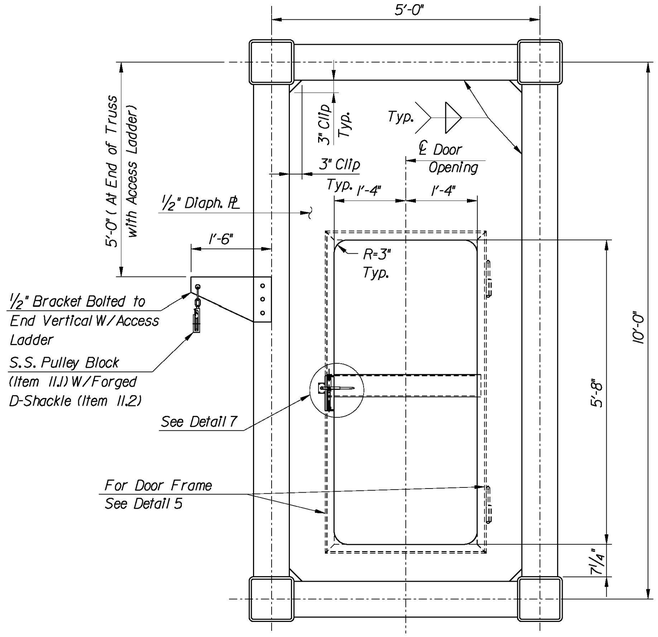


END DIAPHRAGM WITH ACCESS DOOR DETAIL

3/4" = 1'-0"

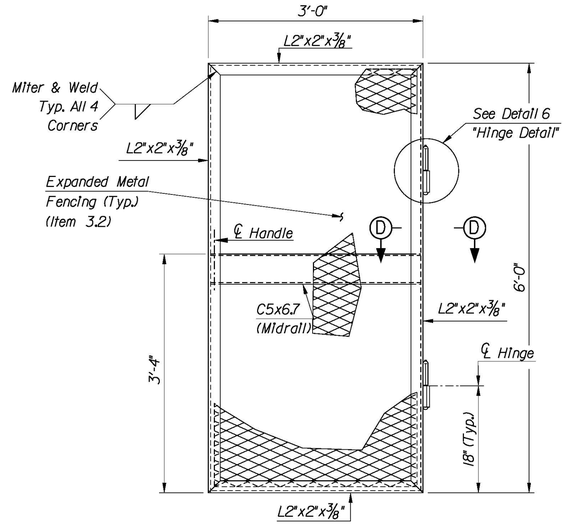


DETAIL 5

DOOR FRAME ASSEMBLY

1" = 1'-0"

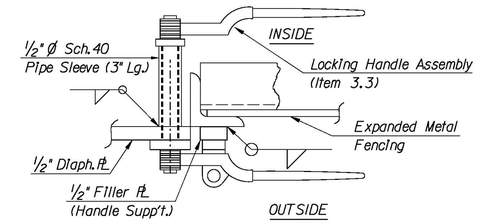


PLAN

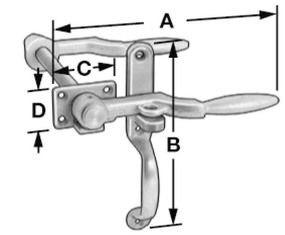


LOCKING HANDLE

(Item 3.3)

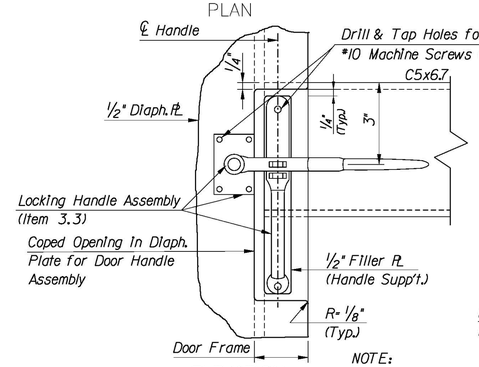


ELEVATION

DETAIL 7

LOCKING DOOR HANDLE

N.T.S

| ITEM 3.3 | DIMENSIONS | | | |
|---|---|---|---|---|
| | A | B | C | D |
| Locking Handle | 7 3/4" | 7 3/4" | 1 3/4" | 2 3/4" |

NOTE:
Expanded Metal Fencing not shown for clarity.

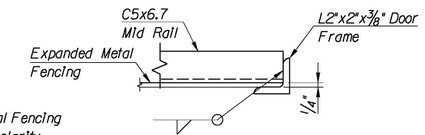


SECTION D–D

(Diaphragm Plate Not Shown For Clarity)

3" = 1'-0"

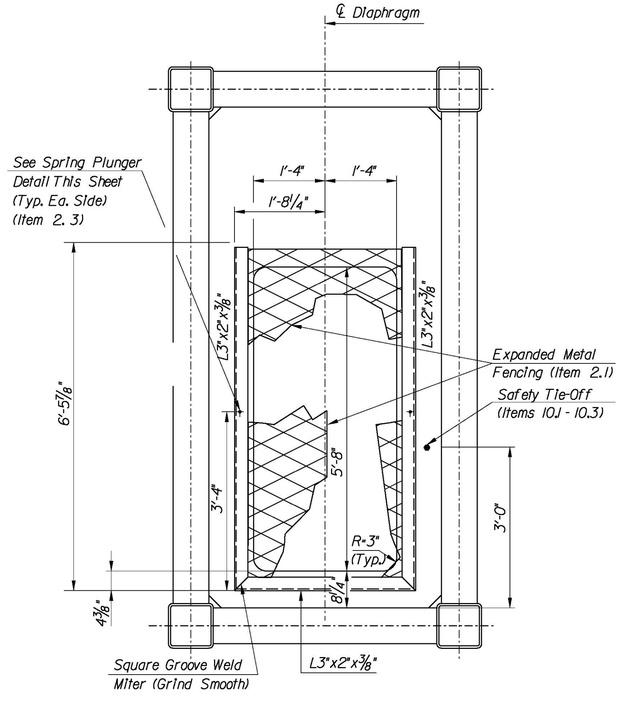


END DIAPHRAGM WITH ESCAPE HATCH DETAIL

3/4" = 1'-0"

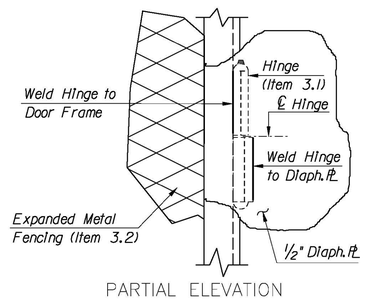


PARTIAL ELEVATION

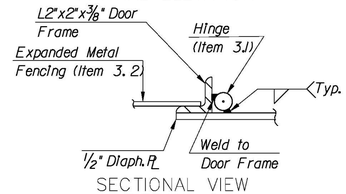


SECTIONAL VIEW

DETAIL 6

HINGE DETAIL

(Narrow Profile Weld-On, Lift-off Hinge W/Grease Fitting)

3" = 1'-0"

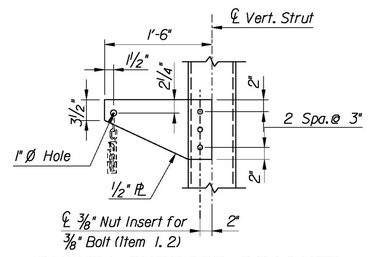


PULLEY SUPPORT BRACKET

1" = 1'-0"

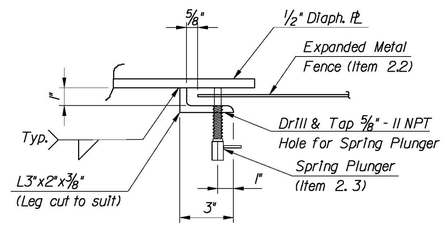


SPRING PLUNGER DETAIL

3" = 1'-0"

NOTES:

1. Expanded metal fencing shall be welded to the door frame angle with 1" long (Min.) welds at equally spaced intervals all around the door frame perimeter. Spacing not to exceed 9". Spot repair all damaged galvanizing on fencing and hinges after fabrication in accordance with ASTM A-780.
2. For Item Lists, see Sheet VM-10.
3. For Door and Diaphragm locations, see Sheet VM-1.

0 1/2 1 2 3 4

ORIGINAL SIZE IN INCHES

| APP. | NO. | DATE | REVISION |
|---|---|---|---|
| | | | |
| | | | |
| | 1 | 8/08 | ORIGINAL DRAWING |

NEW JERSEY TURNPIKE AUTHORITY

**NEW JERSEY TURNPIKE**

OVERHEAD SPAN VMS/VSLS SUPPORT STRUCTURES

DOOR DETAILS

OFFICE OF THE CHIEF ENGINEER
NEW JERSEY TURNPIKE AUTHORITY

WOODBRIDGE NEW JERSEY

2008 STANDARD

DRAWING VM-4

CONTRACT NO. SHEET NO. OF

$TIME$

$FILE$

...\VM-4(Z).dgn 11/21/2008 10:09:05 AM