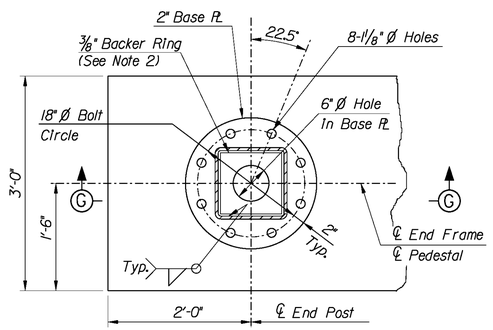

BASE PLATE PLAN VIEW

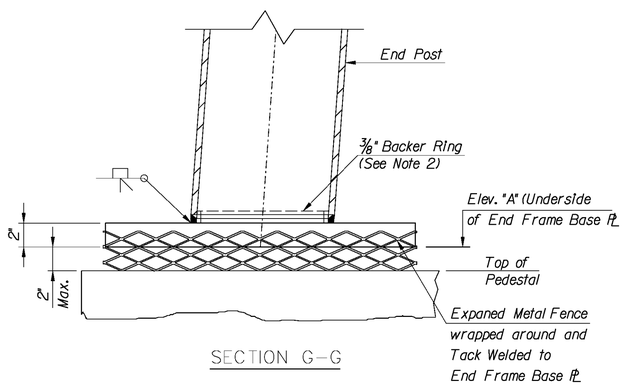

SECTION G-G

DETAIL 8

N.T.S.

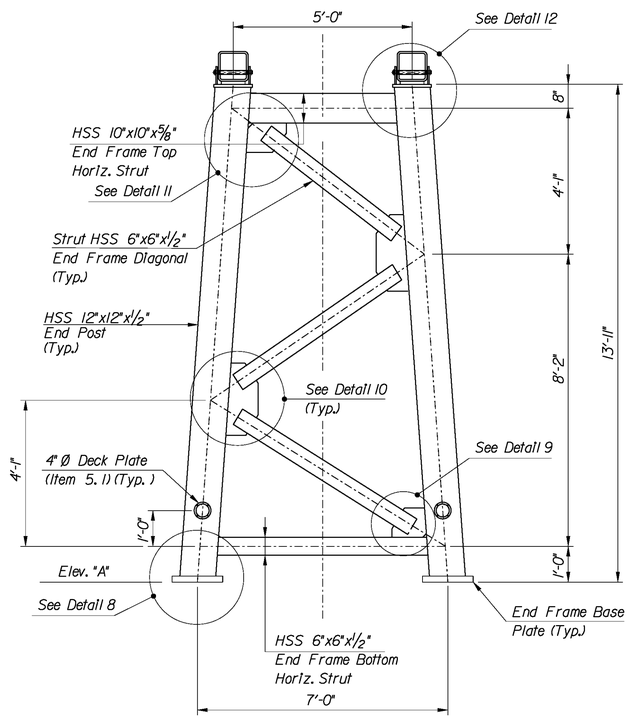

END FRAME ELEVATION

1/2" = 1'-0"

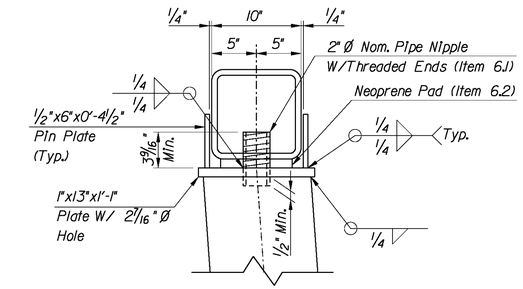

DETAIL 12

1 1/2" = 1'-0"

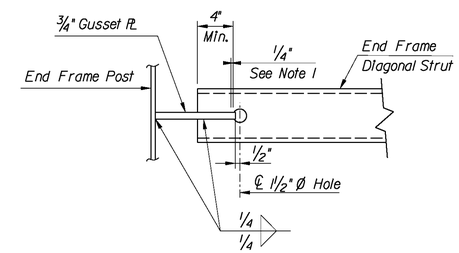

SECTION E-E (AS SHOWN)

SECTION F-F (OPP. HD.)

1 1/2" = 1'-0"

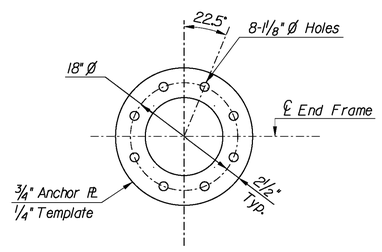

ANCHOR PLATE & TEMPLATE DETAIL

(See Sheets VM-8 & VM-9 for placement)

N.T.S.

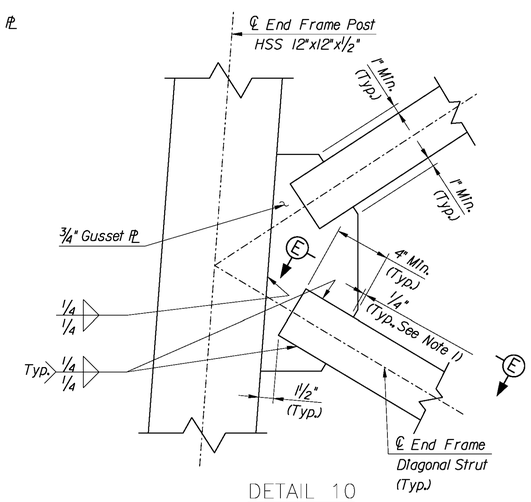

DETAIL 10

1 1/2" = 1'-0"

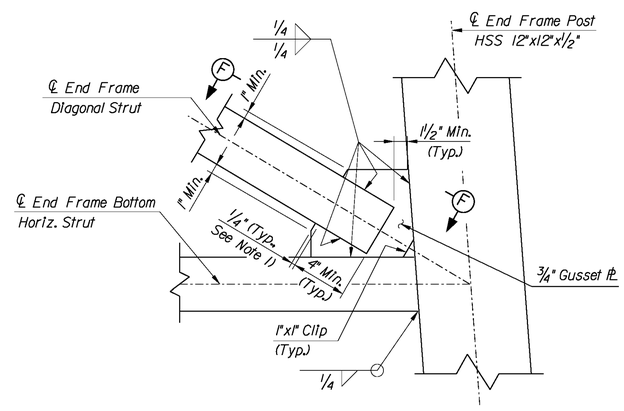

DETAIL 9 (AS SHOWN)

DETAIL 11 (SIMILAR)

1 1/2" = 1'-0"

NOTES:

1. Welds for HSS to Gusset Plate Connections shall be terminated 1/4" from the edge of the Gusset Plate.
2. Full penetration welded end post to base plate connection with the backing ring attached to the plate with a continuous fillet weld around the interior face of the backing ring. The thickness of the backing ring shall not exceed 3/8".
3. For Items List, see Sheet VM-10.

0 1/2 1 2 3 4

ORIGINAL SIZE IN INCHES

APP.	NO.	DATE	REVISION
	1	8/08	ORIGINAL DRAWING

NEW JERSEY TURNPIKE AUTHORITY

NEW JERSEY TURNPIKE

OVERHEAD SPAN VMS/VSLS SUPPORT STRUCTURES

END FRAME DETAILS

OFFICE OF THE CHIEF ENGINEER
NEW JERSEY TURNPIKE AUTHORITY

WOODBRIDGE NEW JERSEY

2008 STANDARD

DRAWING VM-5

CONTRACT NO. SHEET NO. OF

$TIME$

$FILE$

...\VM-5(Z).dgn 11/21/2008 10:10:20 AM