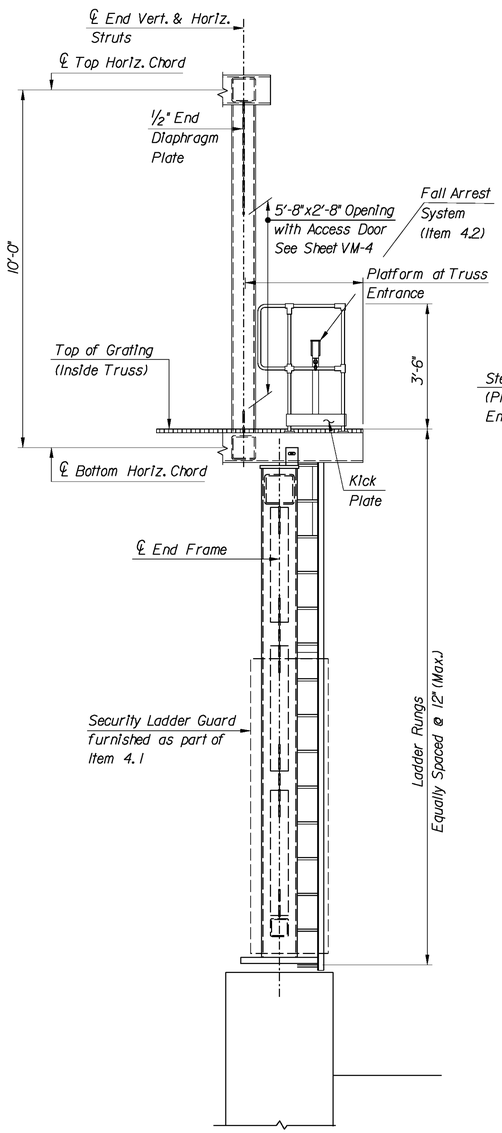

SECTION H-H
N.T.S.

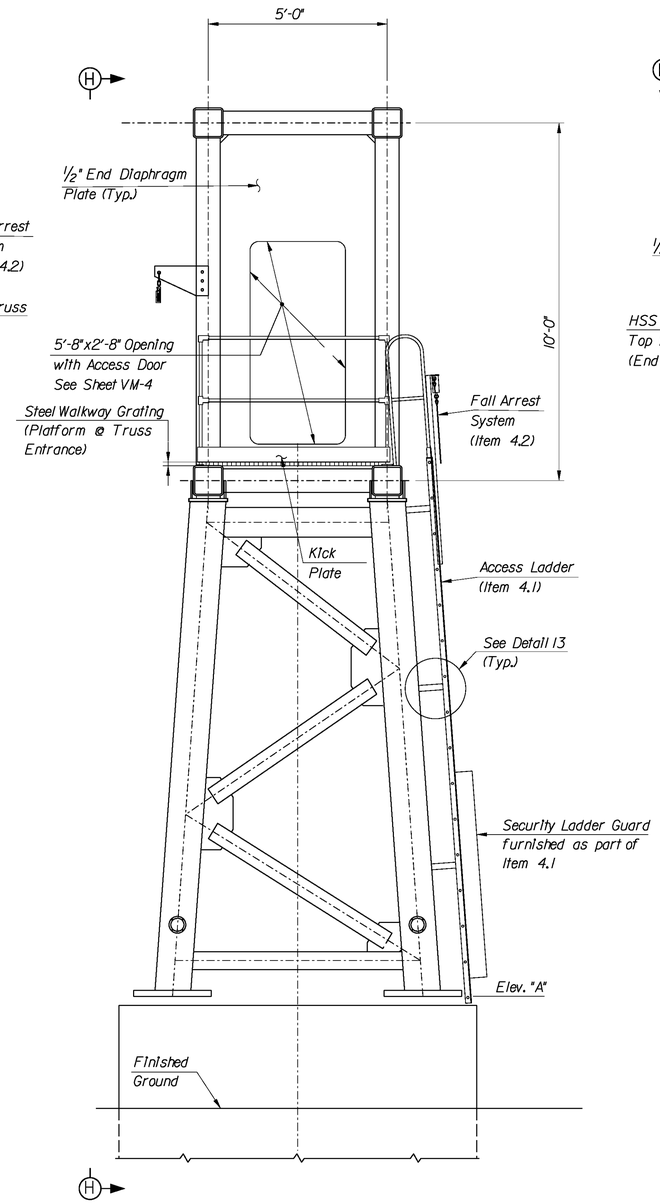

TRUSS END ELEVATION AT LADDER AND PLATFORM
N.T.S.

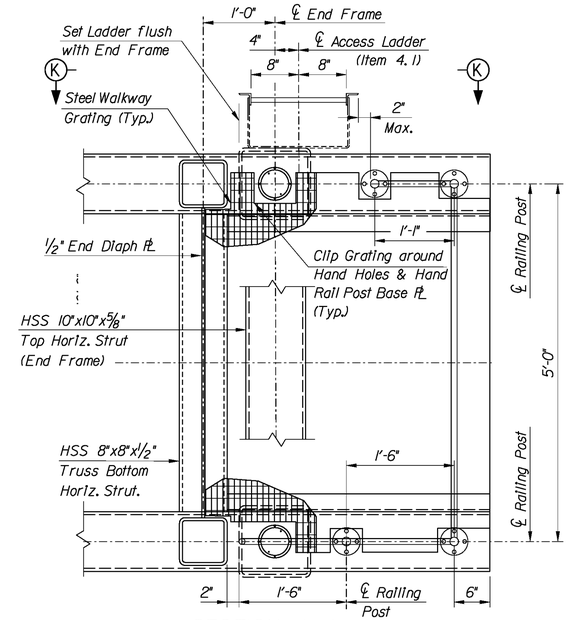

SECTION J-J
1" = 1'-0"

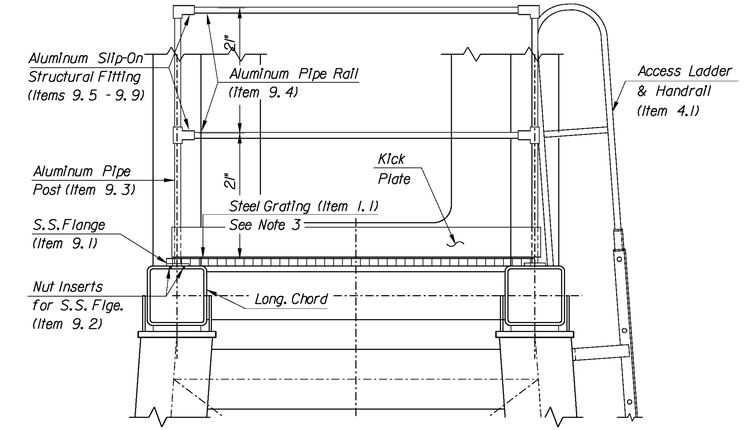

LADDER PLATFORM DETAIL
N.T.S.

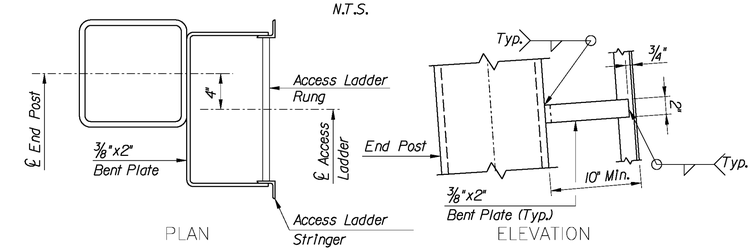

DETAIL 13
(See Note 1)
1 1/2" = 1'-0"

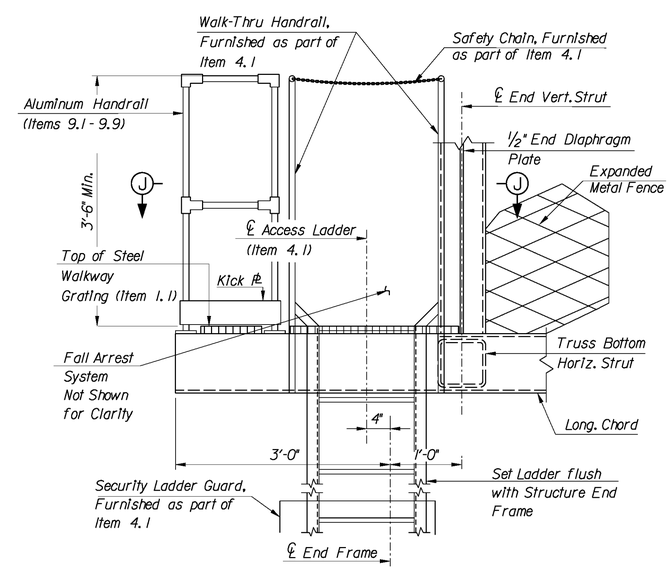

SECTION K-K
1" = 1'-0"

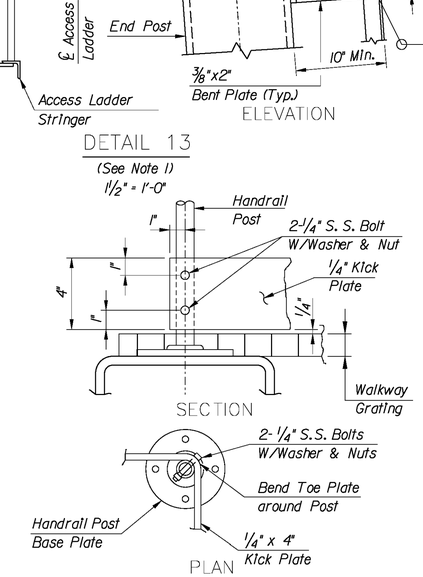

KICK PLATE DETAIL
(Shown at Corner Post, End Similar)

0 1/2 1 2 3 4
ORIGINAL SIZE IN INCHES

NOTES:

1. Ladder stringers and bent plate supports shall be shop-welded to the end frame. As an alternative, the bent plate supports may be field-bolted to the ladder stringers at no additional cost to the Authority.
2. The ladder assembly and hand rails shall be hot-dip galvanized in accordance with ASTM A123. Spot repair all damaged galvanizing ladder assemblies & hand rails after fabrication in accordance with ASTM A780.
3. Steel grating shall be coped to fit around vertical strut members and aluminum handrail post, as required.
4. For Items List, see Sheet VM-10.

APP.	NO.	DATE	REVISION
	1	8/08	ORIGINAL DRAWING

N.T.S.
NEW JERSEY TURNPIKE AUTHORITY

NEW JERSEY TURNPIKE

OVERHEAD SPAN VMS/VSLS SUPPORT STRUCTURES
ACCESS LADDER AND PLATFORM DETAILS

OFFICE OF THE CHIEF ENGINEER
NEW JERSEY TURNPIKE AUTHORITY
WOODBRIDGE NEW JERSEY

2008 STANDARD
DRAWING VM-6

CONTRACT NO. SHEET NO. OF

$FILE$ $TIME$

...\VM-6(Z).dgn 11/21/2008 10:11:35 AM