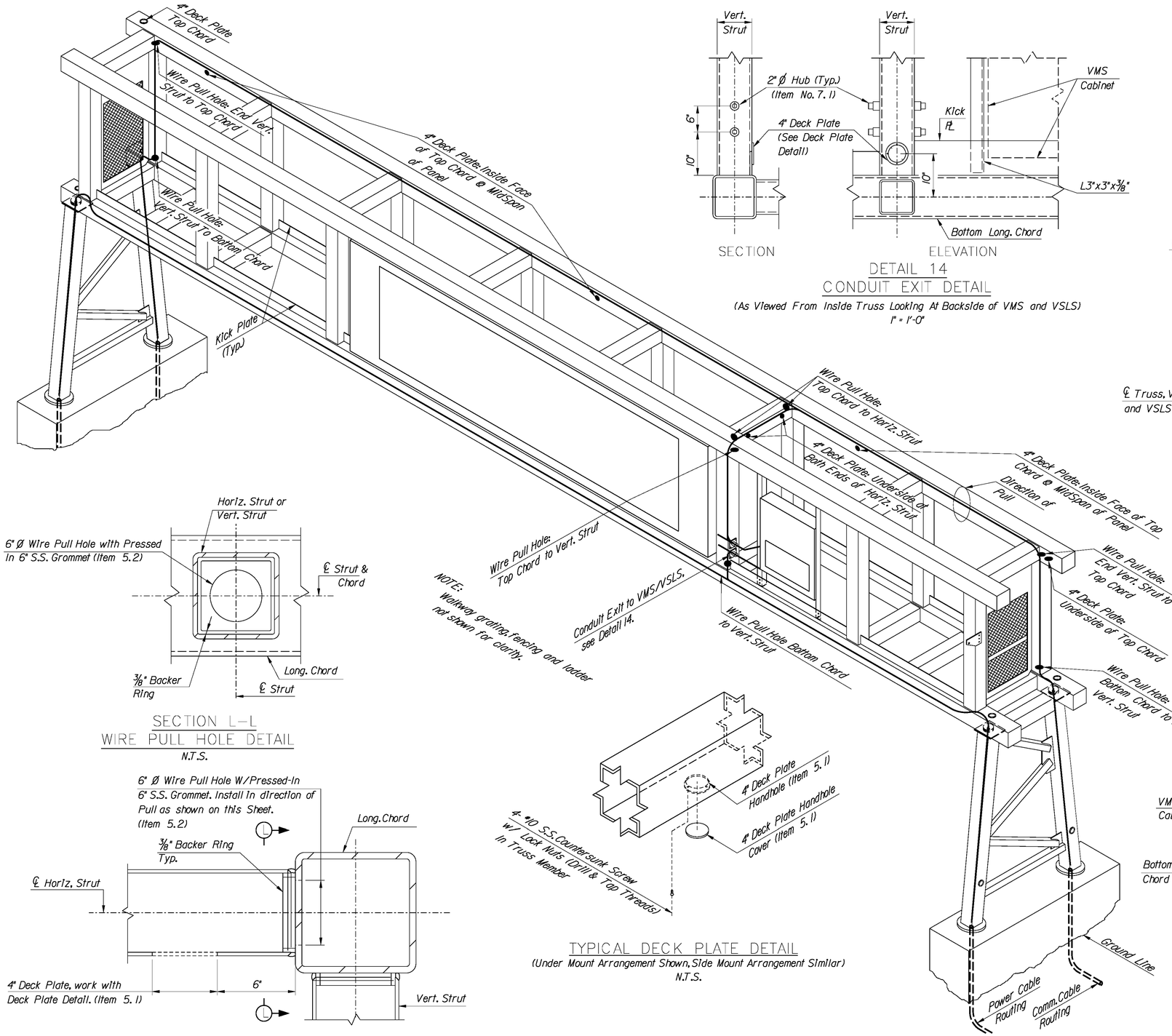





DETAIL 14
CONDUIT EXIT DETAIL
(As Viewed From Inside Truss Looking At Backside of VMS and VSLS)
1" = 1'-0"




SECTION L-L
WIRE PULL HOLE DETAIL
N.T.S.




TYPICAL DECK PLATE AND WIRE PULL HOLE DETAIL
N.T.S.




TYPICAL DECK PLATE DETAIL
(Under Mount Arrangement Shown, Side Mount Arrangement Similar)
N.T.S.

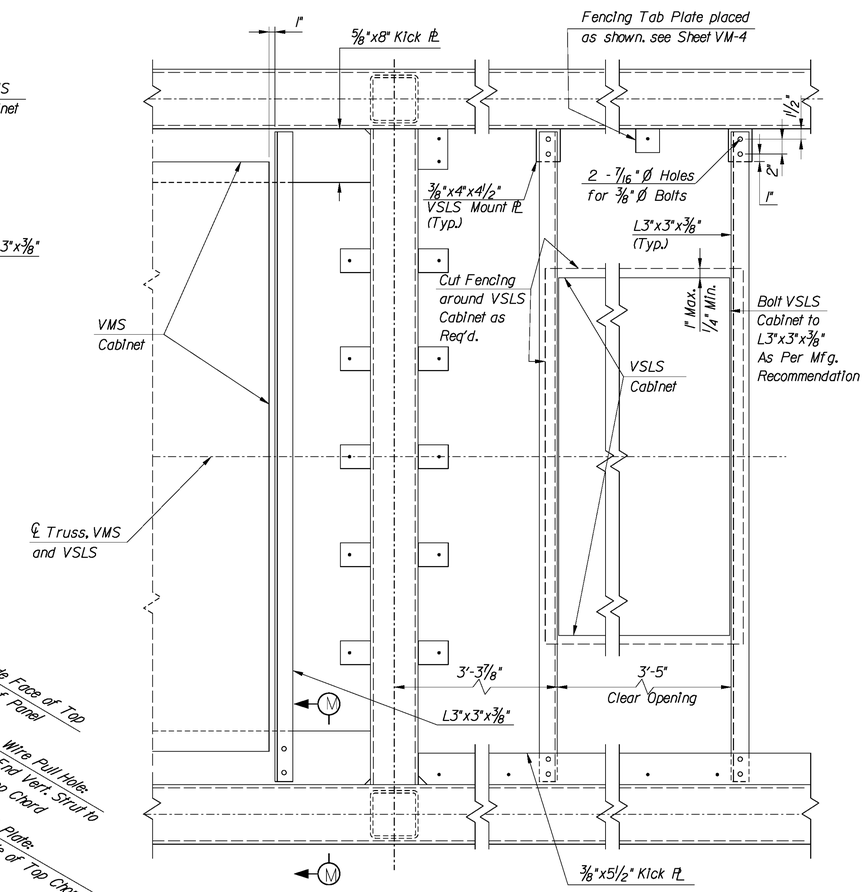


VMS/VSLS MOUNTING DETAILS
1" = 1'-0"

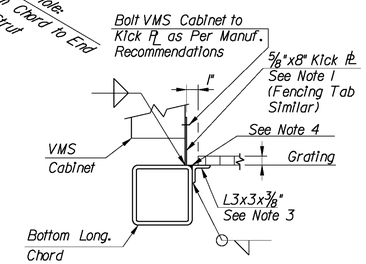


SECTION M-M
1" = 1'-0"

NOTES:

1. Kick plates and fencing tab plates adjacent to and/or supporting the VMS cabinet shall be placed on the chords as shown in Section M-M. For Fencing Tab Detail, See Sheet VM-3. For fencing tab plate placement at all other locations on structure, see Detail 2 on Sheet VM-2.
2. For Items List, see Sheet VM-10.
3. Angles as shown will be required to support the walkway grating adjacent to the VMS cabinet. Angles shall be placed such that they are clear of bottom horizontal struts by 2" Min.
4. Fill weld and grind flush between heel of angle and corner radius of bottom chord.

| APP. | NO. | DATE | REVISION |
|---|---|---|---|
| | | | |
| | | | |
| | 1 | 8/08 | ORIGINAL DRAWING |

NEW JERSEY TURNPIKE AUTHORITY

**NEW JERSEY TURNPIKE**

OVERHEAD SPAN VMS/VSLS SUPPORT STRUCTURES
CABLE ROUTING & VMS/VSLS MOUNTING DETAILS

OFFICE OF THE CHIEF ENGINEER
NEW JERSEY TURNPIKE AUTHORITY
WOODBRIDGE NEW JERSEY

2008 STANDARD
DRAWING VM-7

CONTRACT NO. SHEET NO. OF

$TIME$
$FILE$

...\VM-7(Z).dgn 11/21/2008 10:12:41 AM