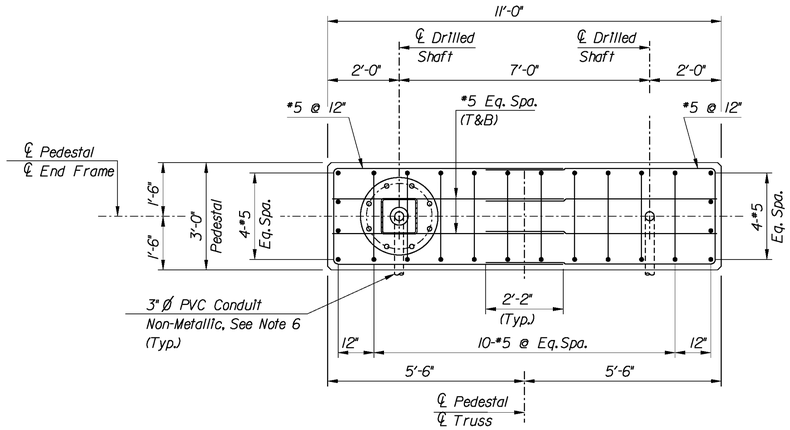

PLAN

N.T.S.

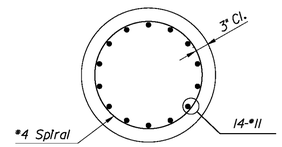

SECTION O-O

Scale: 3/4" = 1'-0"

PEDESTAL FOUNDATION ELEVATION TABLE					
STRUCTURE DESIGNATION	ELEVATION A	ELEVATION B		ELEVATION C	
	LEFT AND RIGHT	LEFT	RIGHT	LEFT	RIGHT
XXXXXXXXX					
XXXXXXX					
XXXXXX					

NOTE TO DESIGNER:
This is a sample table. The Engineer of Record shall be responsible for furnishing this or similar table on the final Contract Drawings.

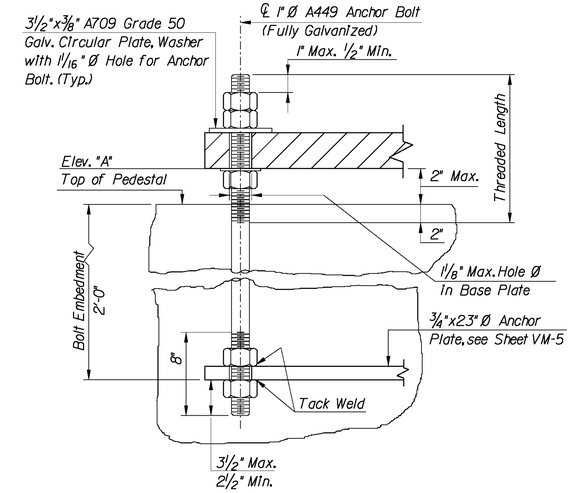

ANCHOR BOLT DETAIL

N.T.S.

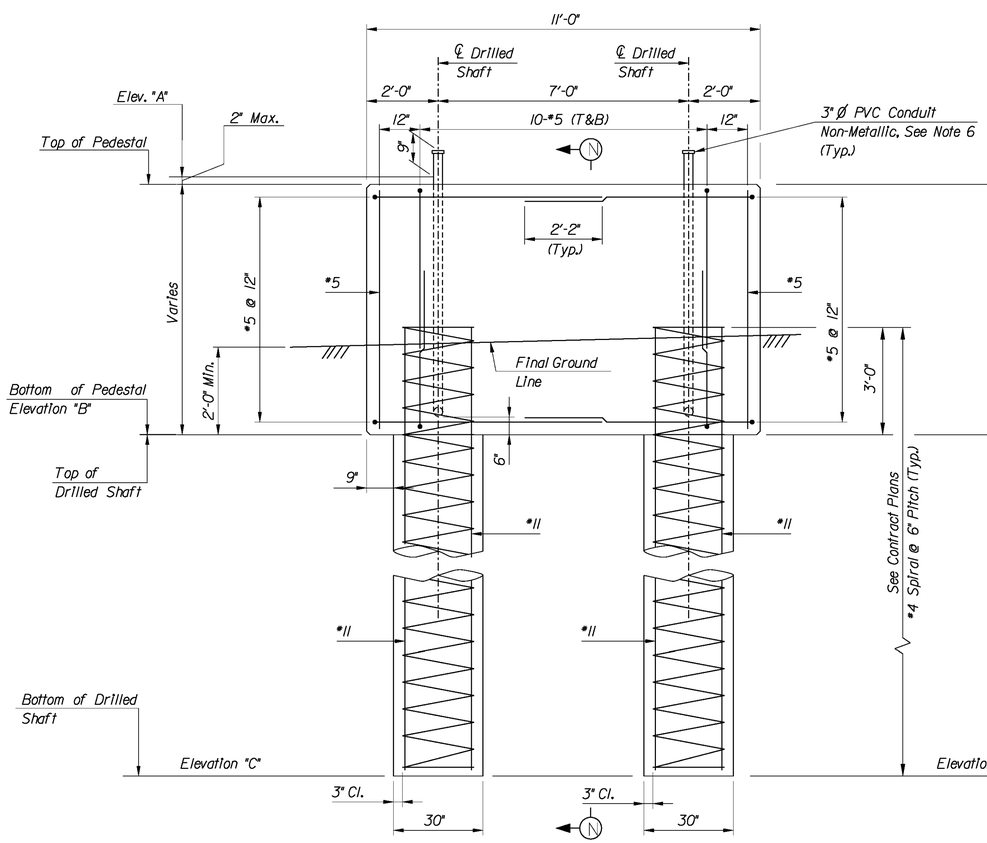

ELEVATION

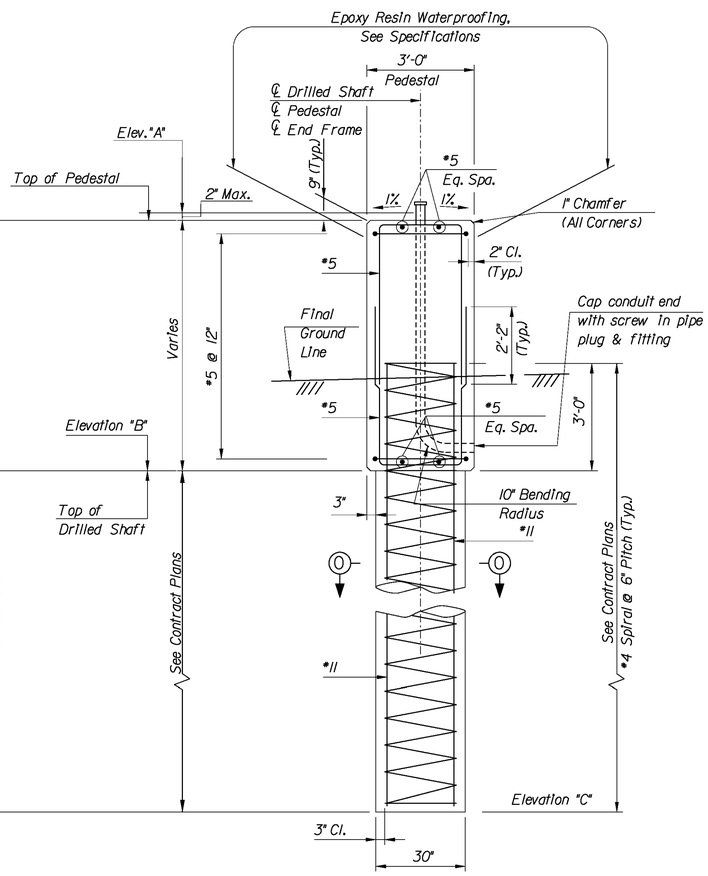

SECTION N-N

VMS/VSLS SUPPORT STRUCTURE DRILLED SHAFT FOUNDATION

N.T.S.

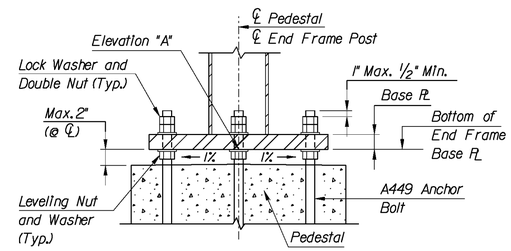

SECTION AT END FRAME BASE

N.T.S.

NOTES:

1. For General Notes, see Sheet VM-1.
2. 30" Ø Drilled Shaft shall conform to Section 436 of the New Jersey Turnpike Authority Standard Supplemental Specifications.
3. The terms LEFT and RIGHT denote Left and Right Pedestals when looking in the direction of traffic under the structure.
4. Reinforcement Steel In Drilled Shafts, including extensions into pedestals, is included in the bid price for the drilled shaft item.
5. Reinforcement steel in the pedestals shall be paid for under the item "Reinforcement Steel In Structures, Epoxy Coated".
6. 3" Ø PVC Conduit shall be paid for under the item "Concrete In Structures, Pedestals".
7. For tabular elevations of pedestals, see contract plans.
8. Elevation "A" to be 4'-0" above the high point of the roadway cross section at the centerline station of the structure. Elevation "A" shall be the same for both pedestals of the same structure.
9. Bar clearance in the pedestal shall be 2" min. and in the drilled shaft shall be 3" min.
10. Concrete in pedestals shall be Class B; concrete in drilled shafts shall be Class C.

APP.	NO.	DATE	REVISION
	1	8/08	ORIGINAL DRAWING

NEW JERSEY TURNPIKE AUTHORITY

NEW JERSEY TURNPIKE

OVERHEAD SPAN VMS/VSLS SUPPORT STRUCTURES

DRILLED SHAFT FOUNDATION DETAILS

OFFICE OF THE CHIEF ENGINEER
NEW JERSEY TURNPIKE AUTHORITY
WOODBRIDGE NEW JERSEY

2008 STANDARD
DRAWING VM-8

CONTRACT NO. SHEET NO. OF

$TIME$

$FILE$

...\VM-8(Z).dgn 11/21/2008 10:14:26 AM