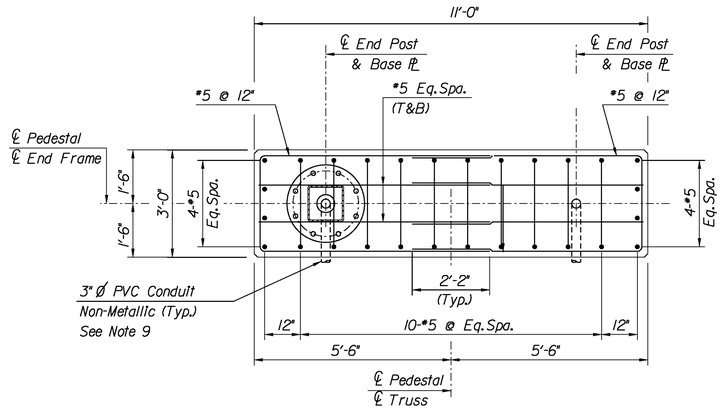

PLAN VIEW

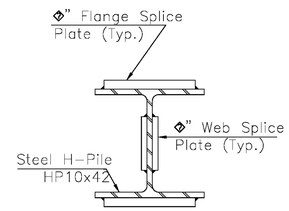

SECTION

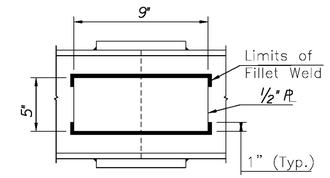

WEB SPLICE

STEEL PILE SPLICE DETAIL
N.T.S.

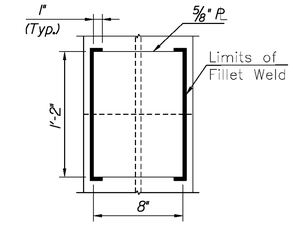

FLANGE SPLICE

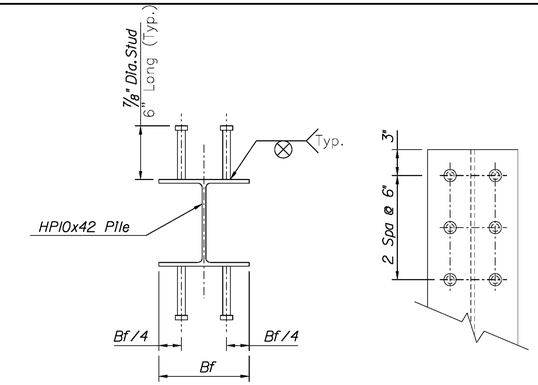

PILE SHEAR STUD DETAIL
Plan View
N.T.S.

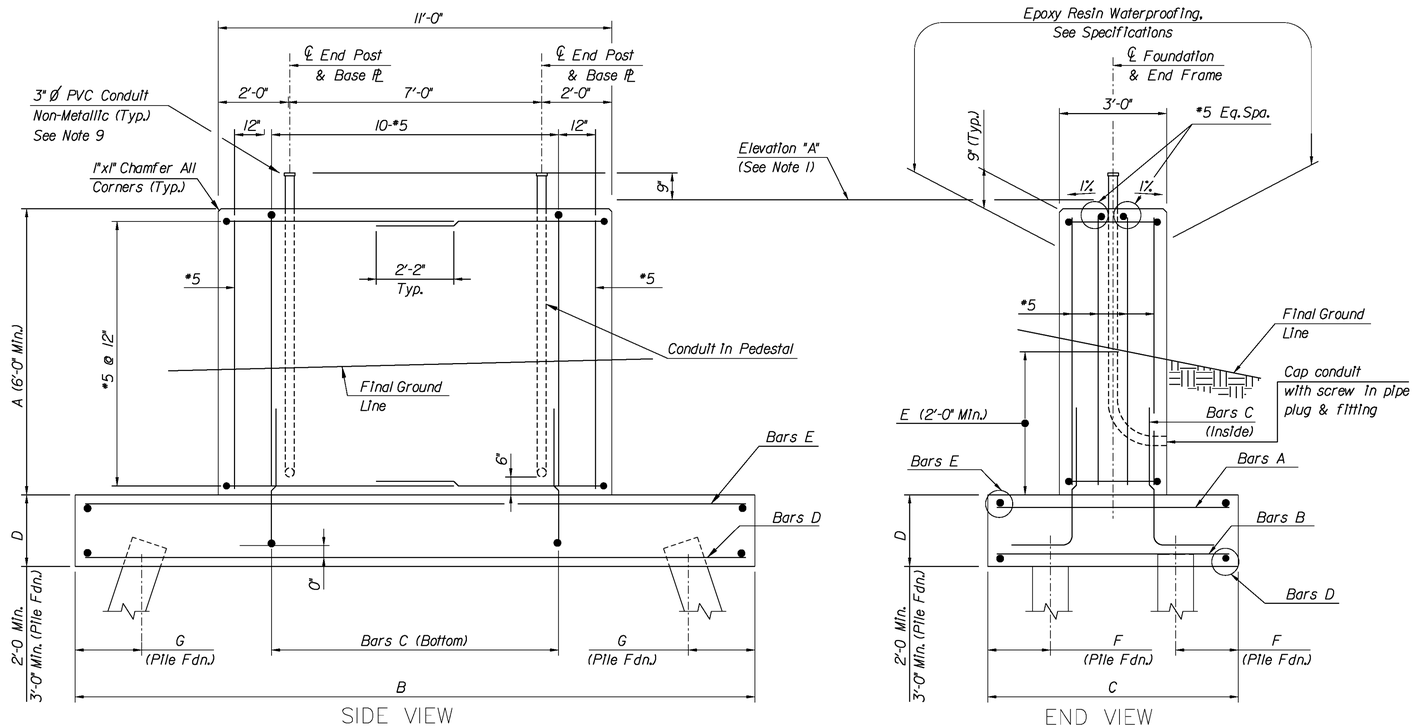

SIDE VIEW

END VIEW

VMS/VSLS SUPPORT STRUCTURE FOUNDATION

Spread Footing (As Shown)
Pile Foundation (As Noted)

NOTES:

1. Elevation "A" to be 4'-0" above the high point of the roadway cross section at the centerline station of the structure. Elevation "A" shall be the same for both pedestals of the same structure.
2. Bar clearance in the pedestal shall be 2" min. and in the footing shall be 3" min.
3. Foundation details are to be symmetrical about centerline. All bars to be equally spaced.
4. For tabular listing of footing dimensions and reinforcing schedules see Contract Plans.
5. Concrete in pedestals shall be Class B; concrete in footings shall be Class C.
6. Minimum footing cover shall be 2'-0".
7. E.F. denotes each face.
8. For Anchor Bolt Details and Placement, see Sheet VM-8.
9. 3" Ø PVC Conduit shall be paid for under the item "Concrete in Structures, Pedestals".
10. Piles shall be driven to refusal.
11. Pile length: Piles shall be driven to at least the minimum tip elevation as indicated on the drawings. If the minimum tip elevation can not be reached, the Engineer shall be notified immediately prior to any further foundation work.
12. No splice will be permitted within 30 feet of design pile cut-off elevation except as approved by the Construction Manager.
13. Electrodes which have become wet, soiled or damaged shall not be used.
14. All welding of the piles shall be in accordance with AWS-D1.5 and the Specifications. All other requirements, including non destructive testing, shall be in accordance with AWS D1.5 and the Specifications.
15. Welding shall not be done when the ambient temperature is lower than 0°F or when the pile is wet, exposed to falling rain or snow.
16. One pile at each footing shall be a Test Pile (load test not required). Order length of test pile shall be 10 feet longer than the estimated pile length.

FOUNDATION DIMENSIONS AND REINFORCEMENT

STRUCTURE NO. OR LOCATION	DIMENSION							REINFORCEMENT				
	A	B	C	D	E	F	G	BAR A	BAR B	BAR C	BAR D	BAR E
XXX.xxx												
XXX.xxx												
XXX.xxx												

NOTE TO DESIGNER:
This is a sample table. The Engineer of Record shall be responsible for furnishing this or similar table on the final Contract Drawings.

0 ½ 1 2 3 4
ORIGINAL SIZE IN INCHES

APP.	NO.	DATE	REVISION
	1	8/08	ORIGINAL DRAWING

NEW JERSEY TURNPIKE AUTHORITY

NEW JERSEY TURNPIKE

OVERHEAD SPAN VMS/VSLS SUPPORT STRUCTURES
SPREAD FOOTING / PILE BEARING FOUNDATION
AND DRIVEN PILE DETAILS

OFFICE OF THE CHIEF ENGINEER
NEW JERSEY TURNPIKE AUTHORITY
WOODBRIDGE NEW JERSEY

2008 STANDARD
DRAWING VM-9

CONTRACT NO. SHEET NO. OF

$TIME$
$FILE$
...\VM-9(Z).dgn 11/21/2008 10:15:21 AM